*Reprinted with permission from: GPC-14 Annual Report: Leafy Spurge Control in the Great Plains. 1981. pp. 1-3.*

*Published by: Great Plains Agricultural Committee.*

# Variability among leafy spurge ecotypes

L. O. BAKER and C. L. BARRETO

Root cuttings of leafy spurge were obtained from Colorado, Idaho, South Dakota, Alberta, Saskatchewan, North Dakota and Montana. The root cuttings were grown in the greenhouse and 18 months later transplanted in the field in Bozeman, MT. The ecotypes were arranged in a randomized complete block design with four replications.

Growth and vigor of the 12 ecotypes were compared 15 months after transplanting by counting the number of shoots and distance from parent plants. The number and length of lateral roots was measured. The lateral root buds were counted. Length and width of leaves located on-third the distance from the base of mature plants were measured.

Tolerance of the strains to herbicide and tillage treatments was determined. Picloram, 2,4-D and a combination of picloram and 2,4-D was applied in July, 1966. The ecotypes had been established in the field for two years. Cultivated plots were tilled with a duck-foot cultivator on July 22, August 15 and September 12, 1966. The number of shoots were counted in a 3-foot diameter circle placed in the center of each plot in June 1967.

**Table 1. Shoot and root growth of 12 strains of leafy spurge 15 months after transplanting in the field at Bozeman, MT.**

| Leafy spurge strains | Shoots per plant | Maximum shoot distance from mother plant (cm) | Lateral root length (cm) | Number of lateral roots | Lateral root buds |
|---|---|---|---|---|---|
| Canada 1 | 1 | 69 | 112 | 15 | 97 |
| Canada 2 | 14 | 109 | 147 | 19 | 124 |
| Colorado | 3 | 53 | 66 | 4 | 18 |
| Wyoming | 14 | 97 | 109 | 4 | 87 |
| Idaho | 2 | 84 | 114 | 18 | 68 |
| S. Dakota | 5 | 89 | 94 | 18 | 50 |
| N. Dakota 1 | 10 | 94 | 102 | 28 | 93 |
| N. Dakota 2 | 8 | 107 | 117 | 12 | 61 |
| Missoula, MT | 2 | 66 | 104 | 15 | 105 |
| Mocassin, MT | 12 | 99 | 130 | 16 | 192 |
| Bozeman, MT | 4 | 69 | 130 | 11 | 70 |
| Antelope, MT | 3 | 64 | 76 | 4 | 22 |
| LSD (.05) | 5 | 22 | 33 | 8 | 29 |

**Table 2. The length and width of leaves of 12 strains of leafy spurge.**

| Strain | Leaf length | Length width |
|---|---|---|
| | (mm) | (mm) |
| Canada 1 | 68.3 | 5.8 |
| Canada 2 | 89.0 | 8.3 |
| Colorado | 64.0 | 6.3 |
| Wyoming | 51.8 | 7.3 |
| Idaho | 49.3 | 7.5 |
| S. Dakota | 66.5 | 9.8 |
| N. Dakota 1 | 52.5 | 9.5 |
| N. Dakota 2 | 69.5 | 5.3 |
| Missoula, MT | 68.8 | 8.3 |
| Moccasin, MT | 91.0 | 7.3 |
| Bozeman, MT | 87.5 | 12.3 |
| Antelope, MT | 64.0 | 8.3 |
| LSD (.05) | 8.6 | 1.9 |

**Table 3. Number of leafy spurge shoots per plant on June 26, 1967, 11 months after tillage or herbicide application.**

| | Number of shoots per plant | | | |
|---|---|---|---|---|
| Strain | Picloram | Picloram + 2,4-D | 2,4-D | Tillage |
| Canada 1 | .3 | .0 | 38.0 | 23.3 |
| Canada 2 | 1.3 | 2.3 | 101.8 | 92.8 |
| Colorado | 5.0 | 2.0 | 55.8 | 33.0 |
| Wyoming | .0 | 2.3 | -- | -- |
| Idaho | 1.0 | 4.0 | 51.3 | 69.8 |
| S. Dakota | 9.3 | 9.3 | 104.0 | 80.8 |
| N. Dakota 1 | 15.8 | 29.0 | 112.0 | 115.8 |
| N. Dakota 2 | 2.3 | 3.3 | 88.3 | 91.3 |
| Missoula, MT | 3.8 | 1.3 | 88.5 | 10.3 |
| Moccasin, MT | .3 | .3 | 89.8 | 139 8 |
| Bozeman, MT | .5 | .3 | 91.3 | 33.0 |
| Antelope, MT | .0 | .5 | 15.8 | 17.3 |
| LSD (.05) | 7.6 | 6.4 | 40.7 | 46.4 |

There was considerable variation in plant growth and vigor among the 12 ecotypes. The number of shoots ranged from 1 in the Canada I ecotype to 14 in the Wyoming ecotype (Table 1). The maximum distance of the shoots from the parent plant varied between 53 to 109 cm. Differences were also evident in the lateral root length and the number of lateral roots and lateral root buds. Leaf length and width varied significantly between strains (Table 2). Leaf length varied from 49 to 91 cm. Width ranged from 5 to 12 cm.

The North Dakota 1 ecotype was the most tolerant to the three herbicide treatments (Table 3). The ecotype collected in Antelope, MT was the most susceptible to herbicide treatments. The North Dakota 1 ecotype was most tolerant to tillage, and the ecotype from Antelope, MT was least tolerant to tillage.

In conclusion, there are significant variations in plant morphology and herbicide tolerance among the ecotypes tested.

*Reprinted with permission from: GPC-14 Annual Report: Leafy Spurge Control in the Great Plains. 1981. p. 4.*
*Published by: Great Plains Agricultural Committee.*

# Use of chlorsulfuron for leafy spurge control

C. L. BARRETO and P. K. FAY

Chlorsulfuron was applied to leafy spurge at three locations in Montana. Rates of 1/8 and 1/4 lb/A were applied with a backpack sprayer using 20 gpa at 30 psi. Treatments were applied in the fall and evaluated the following summer.

A greenhouse experiment was established with chlorsulfuron on leafy spurge. Leafy spurge plants in full bloom were cut off just below the soil surface. Chlorsulfuron was applied to the soil surface at 0, 1/32, 1/16, and 1/8 lb/A. The pots were placed in the greenhouse with a 16-hour daylength. Number of shoots per pot, height of the shoots, weight of the shoots and number of leafs per plant were measured one month after spraying. There were four replications per treatment.

| Herbicide | Rate lb/A | # Shoots/pot | Average ht. shoots (cm) | No. of leafs/plt | Dry wt/pot mg |
|---|---|---|---|---|---|
| Check | 0 | 11.5 | 23.2 | 37.8 | 7385 |
| Chlorsulfuron | 1/32 | 6.3 | 26.4 | 37.5 | 5465 |
| Chlorsulfuron | 1/16 | 5.3 | 15.3 | 31.8 | 4257 |
| Chlorsulfuron | 1/8 | 5.8 | 15.2 | 31.8 | 1475 |
| LSD (0.5) | | 4.8 | 10.5 | 14.9 | 2776 |

There were no differences between the control and the treated plots in the field. In the greenhouse experiment there were differences in number of shoots per pot, height of the shoots and in the amount of dry weight produced per pot. The check produced more shoots per pot than did the treated pots. Chlorsulfuron at 1/32 lb/A produced taller plants than either of the other treated pots. There were no differences in the number of leaves produced per plant. Dry weight per pot decreased with increasing rates of chlorsulfuron. Chlorsulfuron initially inhibited stem elongation of leafy spurge at 1/8 lb/A but the plant outgrew the inhibition. At 1/32 lb/A leafy spurge had extensive internode elongation.

*Reprinted with permission from: GPC-14 Annual Report: Leafy Spurge Control in the Great Plains. 1981. p. 5.*

*Published by: Great Plains Agricultural Committee.*

# Screening trial of herbicides for leafy spurge control

C. L. BARRETO and P. K. FAY

Screening trials were established in Livingston and Judith Gap, Montana to evaluate efficacy of herbicides for leafy spurge control. Herbicides were applied May 28, 1981 except for Krenite which was applied July 28, 1981. The leafy spurge plants were in early bloom in late May and past seed set in late July. Herbicides were applied with a backpack sprayer using 19 gpa at 30 psi. Treatments were replicated three times in a randomized complete block. Control was evaluated using visual ratings.

| | Rate | % Top growth Control 8-12-81 | |
|---|---|---|---|
| Herbicide | LB/A | Judith Gap | Livingston |
| Krenite | 2 | 5.0 | .7 |
| Krenite + Phyto Oil | 4 | 2.0 | 11.7 |
| Krenite | 4 | 5.0 | 15.0 |
| Krenite | 6 | 5.0 | 11.7 |
| R40244 | 1/2 | 8.3 | 30.0 |
| R40244 | 1 | 4.7 | 25.0 |
| R40244 | 2 | 11.7 | 50.0 |
| Takle | 1/2 | 11.7 | 25.0 |
| Tackle | 1 | 8.3 | 56.7 |
| Tackle | 2 | 10.0 | 31.7 |
| Mefluidide + Bentazon | 1/8+1/2 | 5.0 | 10.0 |
| Mefluidide + Bentazon | 1/4+1 | 4.0 | 8.3 |
| Mefluidide + Bentazon | 1/2+2 | 14.7 | 45.0 |
| Check | | .0 | .0 |
| LSD (.05) | | 11.19 | 28.4 |

None of the herbicides tested provided acceptable control of leafy spurge. R40244 gave 50% control in Livingston at 2 lbs/A but only 12% control in Judith Gap. Tackle at 1 lb/A gave 57% control in Livingston but only 8% in Judith Gap. The plots will be evaluated in 1982.

*Reprinted with permission from: GPC-14 Annual Report: Leafy Spurge Control in the Great Plains. 1981. p. 6.*

*Published by: Great Plains Agricultural Committee.*

# Field demonstrations of leafy spurge control

CLAIRE L. BARRETO and PETER K. FAY

In October, 1979 and September, 1980, demonstration plots of chemical control of leafy spurge were established in counties in Montana for use as field tour sites the following year. Site selection was based on county agent or county weed district supervisor recommendations. Ten additional tour sites were in areas treated by Extension or Weed District personnel. Herbicides tested included picloram, dicamba and 2,4-D.

Displays were constructed to show statewide leafy spurge infestations, biology of the weed, biological control and demonstration models of roller and ropewick applicators. The displays were constructed in a manner which facilitated rapid set-up in the field. Radio announcements were taped and sent to the radio stations nearest the tour sites several weeks before the tour. Newspaper releases regarding the tours were sent to the county agents for distribution. The tours were also announced in the April issues of the leafy spurge newsletter.

Hot dogs, beer and pop were available at each tour to provide refreshments and act as an "icebreaker." Dow and Velsicol Chemical Companies provided funding for travel expenses and refreshments. In addition these two chemical companies donated herbicides which were given away as door prizes at the tours.

Leafy spurge bumper stickers, designed and printed by Colorworld of Montana, Bozeman, MT, were distributed at the field tours.

Eight field tours were conducted in 1980 and a total of 10 tours were conducted in June, 1981. In addition a leafy spurge booth was set up and manned at a county fair in place of a field tour. Attendance exceeded original expectations. Tours were held for the second consecutive year in two counties due to county agent requests. The Judith Basin tour was part of a statewide weed fair.

The tours provided a link between the university and the producers. People who did not recognize leafy spurge before the tour left with an awareness of the weed and the problems it can cause once it becomes established. The tours demonstrated side-by-side comparisons of chemical control, gave a review of leafy spurge research and offered encouragement that universities are studying the weed and control methods. In addition to the tours, the bumper stickers were sold at winter meetings and the county fair booth. Some stickers were sold to county agents for distribution within their county.

*Reprinted with permission from: GPC-14 Annual Report: Leafy Spurge Control in the Great Plains. 1981. p. 7.*

*Published by: Great Plains Agricultural Committee.*

# Leafy spurge education materials

CLAIRE L. BARRETO and PETER K. FAY

Leafy spurge slide tape sets were made available for a nominal fee to county agents and vocational agriculture instructors. A narrative on the biology and control of leafy spurge was recorded on cassette tape and reproduced in quantity by the Modern Languages Department, Montana State University. The tape accompanied 21 slides showing leafy spurge plant stages, root system and various means of controlling the weed. An additional nine slides were made available without the taped narration. Leafy spurge plants were collected in the summer of 1981. These plants were pressed, dried and placed in Riker mounts. Root pieces and seed were included with the plant. The plant mounts were made available at a minimum cost to accompany the slide-tape sets.

Twenty-two leafy spurge slide-tape sets and 28 Riker mounts were sent to county agents and vocational agriculture instructors. Materials were ordered by county agents who had hosted leafy spurge tours in 1980 or 1981 and by county agents or instructors in whose county a tour was not held. The slides, tapes and plant mounts allowed leafy spurge information to reach a large number of people around the state with a minimum of time, travel and money. The educational materials provided dissemination of information even when university personnel were not available to present a program.

*Reprinted with permission from: GPC-14 Annual Report: Leafy Spurge Control in the Great Plains. 1981. pp. 8-9.*

*Published by: Great Plains Agricultural Committee.*

# Allelopathic effects of leafy spurge

C. L. BARRETO and P. K. FAY

An experiment was designed to test whether leafy spurge roots exude allelopathic chemicals into the soil. Soil was excavated from a dense stand of leafy spurge in October 1979 at Missoula, MT. An equal quantity of soil was collected from an uninfested area within 30 m of the infested site. Soil was sieved to remove plant debris and stored at -4ºC to await greenhouse testing.

Soil pH, organic matter, phosphorus, potassium, salt hazard and texture were determined on infested soil, uninfested soil and greenhouse soil. Twelve native and introduced grass species were grown in the three soils to test for the presence of allelopathic compounds. Plant height was measured on eight species, plant dry weight and speed of emergence were measured on twelve species in each of the three soils.

There were no differences in the rate of emergence of the grass species among the three soils. Two species showed differences in mean height in the three soils over a one-month period. *Elymus cinereus* had a shorter mean height in the uninfested soil than in the greenhouse or infested soil. The mean height of *Elymus angustus* was shorter in the check than in greenhouse soil. There were no differences in plant height two months after planting. It appears that allelopathy is not a major competition device for leafy spurge.

**Table 1. Speed of emergence index number for grass species grown in Missoula infested and control soils.**

| | Grass species[a] | | | | | | | | | | | |
|---|---|---|---|---|---|---|---|---|---|---|---|---|
| Soil | Calo | Agsm | Agcr | Stvi | Elci | Elan | Alar | Agda | Agsp | Brin | Elju | Agtr |
| Control | .91 | 5.35 | 4.88 | 1.79 | 4.75 | 7.69 | 7.57 | 8.92 | 8.94 | 10.30 | 4.57 | 7.52 |
| Infested | 2.37 | 5.84 | 2.20 | 1.82 | 6.61 | 5.83 | 6.30 | 8.62 | 8.01 | 9.69 | 5.57 | 6.99 |
| LSD .05 | 1.77 | 3.00 | 3.12 | 1.16 | 4.24 | 4.81 | 3.36 | 4.39 | 1.81 | 2.31 | 5.15 | 8.62 |

[a] Calo = *Calomovilfa longifolia*
Agsm = *Agropyron smithii*
Agcr = *Agropyron cristatum*
Stvi = *Stipa vividula*
Elan = *E. angustus*
Elci = *Elymus cinereus*
Alar = *Alopecurus arundinaceus*
Agda = *Agropyron dasystachum*
Agsp = *Agropyron spicatum*
Brin = *Bromus inermus*
Agtr = *Agropyron trachycaulum*
Elju = *E. junceus*

**Table 2. Mean height for each grass species after one month of growth in the Missoula check, Missoula infested and greenhouse soils.**

| | Mean height (mW)[a] Grass species | | | | | | | |
|---|---|---|---|---|---|---|---|---|
| Soil | Agsm | Alar | Agtr | Elju | Agsp | Brin | Elci | Elan |
| Greenhouse | 92.7 a | 38.1 a | 89.8 a | 60.9 a | 98.9 a | 60.1 a | 82.3 a | 134.8 a |
| Check | 78.4 a | 29.3 a | 87.8 a | 48.3 a | 92.5 a | 80.8 a | 50.6 b | 78/7 b |
| Infested | 92.3 a | 32.3 a | 76.7 a | 64.5 a | 104.9 a | 66.2 a | 81.6 a | 92.9 b |

[a]Means within each column followed by the same letter are not statistically different at the 5% level as determined by LSD test.

[b] Agsm = *Agropyron smithii* Agsp = *Agropyron spicatum*
Alar = *Alopeculus arundinaceus* Brin = *Bromus inermus*
Agtr = *Agroypron trachycaulum* Elci = *Elymus cinereus*
Elju = *Elymus junceus* Elan = *Elymus angustus*

*Reprinted with permission from: GPC-14 Annual Report: Leafy Spurge Control in the Great Plains. 1981. pp. 11-12.*

*Published by: Great Plains Agricultural Committee.*

# Preferential grazing of leafy spurge by sheep

B. K. LANDGRAF, P. K. FAY, and K. M. HAVSTAD

A field study was conducted in central Montana during the summer of 1981 to determine whether the intake of leafy spurge by sheep would be influenced by the level of pasture infestation. The study was also designed to determine whether preconditioning sheep with a leafy spurge hay would influence leafy spurge intake when placed in summer pasture.

Three 10-acre pastures were established with a natural leafy spurge gradient: light (18.5% leafy spurge composition), moderate (24.1%) and heavy infestations (41.1%). Three paired 10-acre pastures were established as controls by applying 2 lbs of 2,4-D per acre to eliminate leafy spurge topgrowth. Four esophogeal fistulated ewes were placed in each infested pasture to determine grazing preference. The percent forb, grass, shrub and leafy spurge ingested was determined by analyzing fistula bag contents every other day using the microscopic point technique (Harker, *et al*. 1964).

Four esophogeal fistulated ewes were placed in each infested pasture for the entire study period. Two of the fistulated sheep had previous experience with leafy spurge hay during a winter feeding trial. Two unfistulated ewes were also placed in each infested pasture. Each control pasture contained 6 unfistulated ewes. Weekly weights were taken on individual animals.

**Table 1. Percent leafy spurge in diet.**

| | Collection No. | | | | | | | | | | | | | | | |
|---|---|---|---|---|---|---|---|---|---|---|---|---|---|---|---|---|
| | Mid June | | | July | | | | | | August | | | | | | |
| Group | 1 | 2 | 3 | 4 | 5 | 6 | 7 | 8 | 9 | 10 | 11 | 12 | 13 | 14 | 15 | Avg. |
| I | 5 | 2 | 7 | 12 | 5 | 14 | 19 | 21 | 23 | 21 | 33 | 38 | 37 | 47 | 46 | 24 |
| II | 7 | 16 | 17 | 17 | 18 | 20 | 26 | 27 | 40 | 29 | 42 | 34 | 44 | 43 | 49 | 28 |
| III | 3 | 2 | 1 | 5 | 9 | 4 | 15 | 11 | 22 | 25 | 42 | 46 | 38 | 40 | 41 | 20 |

**Table 2. Preference index[a] for leafy spurge intake.**

| Group | Mid June | Early July | Late July | Late August |
|---|---|---|---|---|
| I<br>light infestation | 0.3 | 0.3 | 1.2 | 2.5 |
| II<br>moderate infestation | 0.3 | 0.7 | 1.6 | 2.0 |
| III<br>high infestation | 0.1 | 0.2 | 0.5 | 1.0 |

[a]Index = $\frac{\text{\% composition of leafy spurge in diet}}{\text{\% composition of leafy spurge in pasture}}$

**Table 3. Average group weight gains (pounds) over a 3-month summer field study.**

| | I<br>Light<br>infestation | II<br>Moderate<br>infestation | III<br>Heavy<br>infestation |
|---|---|---|---|
| | ---------- lbs ---------- | | |
| Sheep on infested pasture | +15 | + 6 | +13 |
| Sheep on corresponding control pasture | +17 | +18 | +17 |

There were no significant differences between means at 5% level.

## Results

There was a 1-3 week adjustment period before the sheep consumed a significant amount of leafy spurge (Table 1). The percent of leafy spurge in the diet increased steadily throughout the summer. The preference index (Table 2) indicates that the animals in group I had the highest preference for leafy spurge even though their pasture contained the lowest spurge infestation. Group III had the lowest preference for leafy spurge. There were no significant differences between the weights of the sheep in the infested pastures and their respective control pastures (Table 3).

The results indicate that sheep will consume an average of 40 to 50% leafy spurge in their diet.

*Reprinted with permission from: GPC-14 Annual Report: Leafy Spurge Control in the Great Plains. 1981. p. 13.*

*Published by: Great Plains Agricultural Committee.*

# The effect of digestion by sheep on leafy spurge seed viability

A. RIPPY, B. LANDGRAF, C. BARRETO, and P. K. FAY

Research conducted in Montana has shown that sheep will eat leafy spurge seed capsules. A seed digestion study was established to determine if the seeds are intact and viable after passing through the digestive tract of sheep. Preliminary studies indicate that no viable seeds were found in sheep manure after force-feeding capsules containing 100 seeds each.

An indepth study is underway. Sheep with esophogeal fistulas will be fed a mixture of seeds and hay. The masticated feed will be collected from the fistula. Seeds will be examined for physical damage and tested for viability.

A second portion of the study will examine complete pass through of seed. The sheep will be fed a pre-determined number of seed. The feces will be collected for four days after feeding and washed to recover seeds. Passed seeds will be tested for viability. A variation of the *in vitro* Tilley and Terry two-stage digestion technique will be used to determine the percent digestion of whole leafy spurge seed. Undigested seeds will be tested for viability. Whole seeds will be used with *in vivo* digestion trials to verify the results of the *in vitro* digestion study.

*Reprinted with permission from: GPC-14 Annual Report: Leafy Spurge Control in the Great Plains. 1981. pp. 14-15.*

*Published by: Great Plains Agricultural Committee.*

# Picloram in combination with growth regulators for control of leafy spurge

GREGG A. REGIMBAL and ALEX R. MARTIN

Two experiments were conducted to evaluate growth regulators in combination with picloram for leafy spurge control. Both experiments were done on a pasture located southwest of Lincoln, Nebraska. The treatments were applied on May 14 and 15, 1981 when the leafy spurge was in the early bud stage. The experiment was set up as a randomized complete block design with four replications. Treatments were applied with a tractor-mounted compressed-air-powered sprayer calibrated to deliver 20 gpa. Visual evaluations were made on September 10, 1981 and the results are presented in the tables. Addition of chlorflurenol to picloram tended to improve leafy spurge control. (Agronomy Dept., University of Nebraska-Lincoln)

**Table 1. Leafy spurge control with picloram in combination with growth regulators, Lincoln, Nebraska in 1981. (Regimbal and Martin)**

| Treatment | Rate (lb/A) | % Control |
|---|---|---|
| Picloram | 1/4 | 31 |
| Chlorflurenol | 1/2 | 31 |
| Picloram + Chlorflurenol (tank mix) | 1/4 + 1/2 | 61 |
| Picloram + Chlorflurenol (one day later) | 1/4 + 1/2 | 29 |
| Chlorflurenol + Picloram (one day later) | 1/2 + 1/4 | 32 |
| Mefluidide | 1/4 | 35 |
| Picloram + Mefluidide (tank mix) | 1/4 + 1/4 | 35 |
| Picloram + Mefluidide (one day later) | 1/4 + 1/4 | 40 |
| Mefluidide + Picloram (one day later) | 1/4 + 1/4 | 39 |
| Untreated check | | 0 |

**Table 2. Leafy spurge control with picloram in combination with chlorflurenol, Lincoln, Nebraska. (Regimbal and Martin)**

| Treatment | Rate (lb/A) | % Control |
|---|---|---|
| Picloram | 1 | 49 |
| Picloram + Chlorflurenol | 1 + 1/4 | 64 |
| Picloram + Chlorflurenol | 1 + 1/2 | 76 |
| Picloram | 1/4 | 33 |
| Picloram + Chlorflurenol | 1/4 + 1/4 | 49 |
| Picloram + Chlorflurenol | 1/4 + 1/2 | 54 |
| Picloram | 1/8 | 29 |
| Picloram + Chlorflurenol | 1/8 + 1/4 | 24 |
| Picloram + Chlorflurenol | 1/8 + 112 | 40 |
| Chlorflurenol | 1/2 | 28 |
| Chlorflurenol | 1/4 | 38 |
| Untreated check | | 0 |

*Reprinted with permission from: GPC-14 Annual Report: Leafy Spurge Control in the Great Plains. 1981. p. 16.*

*Published by: Great Plains Agricultural Committee.*

# Ropewick applicators with picloram in combination with chlorflurenol for leafy spurge control

GREGG A. REGIMBAL and ALEX R. MARTIN

Experiments at two locations were used to evaluate the ropewick applicators as an approach for leafy spurge control with herbicides. One pasture was located southwest of Lincoln and the other near Plainview, Nebraska. The treatments were applied on May 19 and May 21, 1981, respectively, when leafy spurge was in the early bud stage. The experiments were in a randomized complete block design with four replications at Lincoln and three replications at Plainview.

Two types of ropewick applicators were used in the experiments, the pipewick and the Bobar. The pipewick consists of a series of "peppermint" (manufactured by Gulf Rope and Cordage Co.), 0.5 inch diameter, solid braid nylon rope that is placed in polyvinyl chloride pipe. The Bobar, which is manufactured by the Broyhill Co., has numerous closely spaced diagonal ropes that are mounted on a rectangular steel frame. Both ropewicks transfer the herbicide from their reservoir onto the leafy spurge by wicking action. All treatments were one-pass coverage except for the pipewick which was one and two pass coverage. Broadcast applications were applied with a tractor-mounted compressed-air-powered sprayer calibrated to deliver 20 gpa.

Visual evaluations were made on September 10 in Lincoln and September 24 in Plainview. Control was increased when two passes were used with the pipewick. The results are presented in the table. (Agronomy Dept., University of Nebraska-Lincoln)

**Table. Leafy spurge control with ropewick applicators near Lincoln and Plainview, Nebraska. (Regimbal and Martin)**

| Type of Application | Treatment | Rate or Solution | % Control | |
|---|---|---|---|---|
| | | | Lincoln | Plainview |
| Pipewick lX[a] | Picloram | 10%[c] | 41 | 46 |
| Pipewick 2X[b] | Picloram | 10% | 66 | 44 |
| Bobar 1X | Picloram | 10% | 51 | 42 |
| Sprayer | Picloram | 1 lb/A | 79 | 98 |
| Pipewick 1X | Picloram + Chlorflurenol | 10% + 10%[d] | 45 | 23 |
| Pipewick 2X | Picloram + Chlorflurenol | 10% + 10% | 66 | 41 |
| Bobar 1X | Picloram + Chlorflurenol | 10% + 10% | 61 | 58 |
| Untreated check | | | 0 | 0 |

[a]One pass coverage.
[b]Two pass coverage.
[c]Dow Chemical formulation Tordon 22K.
[d]E.M. Industries, Inc.

*Reprinted with permission from GPC-14 Annual Report: Leafy Spurge Control in the Great Plains. 1981. pp. 17-18.*

*Published by: Great Plains Agricultural Committee.*

# Forage production in pasture and rangeland following two years of leafy spurge control

RODNEY G. LYM and CALVIN G. MESSERSMITH

An experiment to evaluate long-term leafy spurge management with resulting forage production was established at four sites in North Dakota in 1980. The sites included a bluegrass pasture near Sheldon, an exclosure area on the Sheyenne National Grasslands near McLoud, and two sites on a state game management area near Valley City. The main population of grasses was bluegrass (*Poa* spp.) with occasional crested wheatgrass, smooth brome, big bluestem or other native grasses. All sites were established in early June except one site at Valley City which was established in September 1980. The herbicides applied in 1980 (Year 1) included 2,4-D, dicamba, picloram liquid (2S), picloram granule (2%G), and picloram applied using the roller and wick applicators. The conventional broadcast treatments were applied using a tractor-mounted sprayer delivering 8 gpa water at 35 psi. A granular applicator was used to apply the picloram 2%G treatments. The roller and wick applicator height was adjusted to treat the top one-half of the taller leafy spurge stems. The additive in the roller and wick treatments was a 5% (v:v) oil concentrate (83% paraffin-based petroleum oil + 15% emulsifier). The plots were 15 by 150 feet and replicated twice at each site in a randomized complete block design. In 1981 (Year 2), each plot was divided into six 7.5 by 50 feet subplots for retreatments of 2,4-D, picloram 2S, dicamba or no retreatment. In July 1981, a 3 by 25 feet section of each plot was havested with a flail mower. Sub-samples were taken by hand along each harvested strip so that leafy spurge and forage weight could be separated. The samples were oven dried. All data are shown in the table and each mean is an average of eight plots, i.e. four sites with two replications per site.

Picloram 2S at 2 lb/A provided the best leafy spurge control after two years averaging 84% without a retreatment and up to 91% with a retreatment of picloram 2S at 0.25 lb/A. Picloram 2%G at 2 lb/A was the only other original treatment that provided fair control by August 1981 without a retreatment. The best retreatments for leafy spurge control were picloram at 0.25 lb/A alone or in combination with 2,4-D at 1.0 lb/A which provided 60 and 63% control, respectively. Retreatment with dicamba at 2.0 lb/A averaged 46% control, but dicamba at 1.0 lb/A and 2,4-D at 1.0 lb/A did not improve control compared to no retreatment.

Forage yield increased for 50 of the 59 treatments compared to the control, and the yield increased over 250% for five treatments. The five highest yielding treatments (Year 1 + Year 2) were: control + (picloram + 2,4-D at 0.25 + 1.0 lb/A), 2,4-D at 2 lb/A + picloram at 0.25 lb/A, control + picloram at 0.25 lb/A, picloram 2S at 1 lb/A + (picloram + 2,4-D at 0.25 + 1.0 lb/A), and picloram 2%G at 2 lb/A + dicamba at 1.0 lb/A. The treatment with the best overall leafy spurge control at 91% was picloram 2S at 2.0 lb/A but

the forage yield was intermediate at 1354 lb/A. The highest yielding treatment at 1870 lb/A was picloram + 2,4-D at 0.25 1.0 lb/A in Year 2 without a Year 1 treatment and had 52% leafy spurge control. The latter treatment is more economical, and yearly applications can be expected to reach leafy spurge control of 80 to 90% after three to four years. If the terrain makes yearly treatments unfeasible, the picloram at 2.0 lb/A treatment can be expected to give good leafy spurge control for two to three years.

**Table. Leafy spurge control with resulting forage production after two years (Lym and Messersmith).**

| | | | Year two treatment/rate (lb/A) | | | | | | |
|---|---|---|---|---|---|---|---|---|---|
| Year one treatment | Rate (lb/A) | Soln[a] conc | 2,4-D 1 | Dicamba 1 | Dicamba 2 | Picloram 0.25 | 2,4-D+ Picloram 1+0.25 | Control 0 | Mean |
| | | | (Percent control) | | | | | | |
| 2,4-D | 2 | | 13 | 25 | 19 | 48 | 56 | 9 | 28 |
| Picloram | 2%G | 1 | 11 | 23 | 38 | 38 | 56 | 15 | 31 |
| Picloram | 2%G | 2 | 71 | 78 | 75 | 90 | 89 | 79 | 80 |
| Picloram | 2S | 1 | 51 | 45 | 61 | 68 | 69 | 53 | 59 |
| Picloram | 2S | 2 | 90 | 85 | 89 | 91 | 86 | 84 | 88 |
| Roller | | 1:7 | 28 | 40 | 40 | 51 | 55 | 40 | 42 |
| Roller+oil conc | | 1:7 | 44 | 46 | 51 | 62 | 63 | 33 | 50 |
| Wick | | 1:3 | 31 | 13 | 24 | 46 | 50 | 31 | 33 |
| Wick+oil conc | | 1:3 | 30 | 35 | 42 | 62 | 57 | 27 | 42 |
| Control | | | 5 | 12 | 18 | 41 | 52 | 0 | 21 |
| Mean | | | 38 | 41 | 46 | 60 | 63 | 37 | |
| LSD(0.05)=yr 1=7; yr 2=6; yr 1 x yr 2=18 | | | | | | | | | |
| | | | (Yield/lb/A) | | | | | | |
| 2,4-D | | 2 | 1409 | 1142 | 1293 | 1712 | 1233 | 1360 | |
| Picloram | 2%G | 1 | 1343 | 1112 | 1195 | 1164 | 1124 | 1177 | |
| Picloram | 2%G | 2 | 1464 | 1554 | 1247 | 1313 | 1264 | 1284 | |
| Picloram | 2S | 1 | 936 | 1223 | 1293 | 1101 | 1569 | 1315 | |
| Picloram | 2S | 2 | 1159 | 1080 | 1013 | 1354 | 1159 | 1114 | |
| Roller | | 1:7 | 1423 | 1230 | 1301 | 1387 | 1150 | 1233 | |
| Roller+oil conc | | 1:7 | 1360 | 1344 | 1093 | 1338 | 1018 | 1250 | |
| Wick | | 1:3 | 1278 | 1373 | 1146 | 1141 | 1223 | 915 | |
| Wick+oil conc | | 1:3 | 1181 | 1157 | 1039 | 886 | 907 | 881 | |
| Control | | | 1082 | 1178 | 881 | 1681 | 1870 | 623 | |
| LSD (0.05)=421 | | | | | | | | | |

[a]Herbicide:water (v:v).

*Reprinted with permission from: GPC-14 Annual Report: Leafy Spurge Control in the Great Plains. 1981. pp. 19-21.*

*Published by: Great Plains Agricultural Committee.*

# Long-term management of leafy spurge in pasture and rangeland – Year one

CALVIN G. MESSERSMITH and RODNEY G. LYM

*Department of Agronomy, published with the approval of the Agriculture Experiment Station, North Dakota State University, Fargo, ND.*

Seven experiments were established around North Dakota in 1980 to evaluate long-term leafy spurge management alternatives on pasture and rangeland. All experiments were established in late June and early July 1980 except the fall Valley City experiment which was established in Sept. 1980. The herbicides in the study included 2,4-D, dicamba, picloram liquid (2S) and granular (2%G), and picloram applied using the roller and wick applicators. The conventional broadcast treatments were applied using a tractor-mounted sprayer delivering 8 gpa water at 35 psi. A granular applicator was used to apply the picloram 2%G treatments. The roller and wick were adjusted to treat the top one-half of the taller leafy spurge stems. The wick was made of two 0.75 inch PVC pipes, with small holes covered with poly-foam and a 50% cotton:50% polyester canvas material. The additive in the roller and wick treatments was a 5% (v:v) oil concentrate (83% paraffin based petroleum oil + 15% emulsifier). The plots at each site were 15 by 150 ft and replicated twice in a randomized complete block. Visual evaluations were based on percent stand reduction as compared to the control and were taken in the spring and fall of 1981. Also, stand counts of leafy spurge were taken in each plot in the spring of 1981. The number of stems in six 1 $yd^2$ samples was counted in each plot. Data from the Dickinson site are limited, due to extreme drought in 1980 and early 1981. All data are shown in the table.

ANOVA showed significant treatment by site interaction, so treatments will be discussed by sites. The 2,4-D at 2 lb/A treatment did not provide long-term leafy spurge control. Control in spring 1981 ranged from 47% at the spring Valley City site to 3% at Minot. The stand counts at four sites for the 2,4-D treated plots and the control were similar, and there was a significant increase at Minot in the number of stems/$yd^2$ compared to the control when treated with 2,4-D at 2 lb/A.

Picloram 2%G at 1 and 2 lb/A at four sites provided excellent leafy spurge control when evaluated after 12 months, except 1 lb/A at Sheldon. Leafy spurge control with picloram 2%G at 1 lb/A was good after 12 months but poor after 15 months at all sites. Stand counts revealed that picloram 2%G at 1 and 2 lb/A significantly reduced the number of stems/$yd^2$ at all sites except with picloram 2%G at 1 lb/A at Sheldon.

**Table. Long-term management of leafy spurge. (Messersmith and Lym).**

| Evaluation date | Treatment | Herbicide Rate (lb/A) | Herbicide Sol'n[a] conc | Location: Shey-enne | Sheldon | Valley City (Spring) | Valley City (Fall) | Tolna | Minot | Dickin-son | Avg |
|---|---|---|---|---|---|---|---|---|---|---|---|
| Spring 1981 | | | | (percent control) | | | | | | | |
| | 2,4-D (LVE) | 2 | 1:15 | 19 | 18 | 47 | 14 | 8 | 3 | | 18 |
| | Picloram 2%G | 1 | ---- | 96 | 24 | 87 | 93 | -- | -- | | 76 |
| | Picloram 2%G | 2 | ---- | 98 | 98 | 99 | 96 | | | | 98 |
| | Picloram 2S | 1 | 1:15 | 94 | 95 | 99 | 100 | 65 | 80 | | 88 |
| | Picloram 2S | 2 | 1:7 | 100 | 100 | 99 | 99 | 99 | 99 | | 99 |
| | Roller | - | 1:7 | 90 | 78 | 71 | 97 | 6 | 53 | | 65 |
| | Roller+oil conc. | - | 1:7 | 65 | 53 | 61 | 100 | 8 | 36 | | 54 |
| | Wick | - | 1:3 | 59 | 69 | 79 | 71 | 64 | 54 | | 66 |
| | Wick+oil conc. | - | 1:3 | 44 | 71 | 75 | 94 | 73 | 45 | | 67 |
| | Dicamba 4S | 4 | 1:7 | | | | | 26 | 31 | | 29 |
| | Dicamba 4S | 8 | 1:3 | | | | | 60 | 8o | | 29 |
| | LSD (0.05) | | | 33 | 32 | 39 | 9 | 42 | 22 | | |
| Fall 1981 | | | | (percent control) | | | | | | | |
| | 2,4-D (LVE) | 2 | 1:15 | 23 | 0 | 1 | 11 | 0 | 5 | 0 | 6 |
| | Picloram 2%G | 1 | ---- | 41 | 3 | 8 | 0 | ---- | ---- | ---- | 13 |
| | Picloram 2%G | 2 | ---- | 89 | 76 | 86 | 69 | ---- | ---- | ---- | 80 |
| | Picloram 2S | 1 | 1:15 | 43 | 21 | 51 | 97 | 55 | 0 | 87 | 50 |
| | Picloram 2S | 2 | 1:7 | 99 | 63 | 77 | 97 | 100 | 80 | 96 | 87 |
| | Roller | - | 1:7 | 78 | 5 | 5 | 74 | 10 | 10 | 0 | 26 |
| | Roller+oil conc. | - | 1:7 | 30 | 11 | 1 | 91 | 5 | 20 | 28 | 27 |
| | Wick | - | 1:3 | 35 | 21 | 39 | 28 | 40 | 15 | 0 | 25 |
| | Wick+oil conc. | - | 1:3 | 0 | 4 | 50 | 55 | 0 | 25 | 30 | 23 |
| | Dicamba 4S | 4 | 1:7 | ---- | ---- | ---- | ---- | 75 | 20 | 51 | 48 |
| | Dicamba 4S | 8 | 1:3 | ---- | ---- | ---- | ---- | 75 | 13 | 35 | 41 |
| | LSD (0.05) | | | 75 | 36 | 47 | 7 | 65 | 51 | 38 | |
| Spring 1981 | | | | (stems/yd$^2$) | | | | | | | |
| | 2,4-D (LVE) | 2 | 1:15 | 378 | 721 | 555 | 373 | 1376 | 2925 | ---- | ---- |
| | Picloram 2%G | 1 | ---- | 29 | 451 | 132 | 178 | ---- | ---- | ---- | ---- |
| | Picloram 2%G | 2 | ---- | 5 | 2 | 2 | 122 | ---- | ---- | ---- | ---- |
| | Picloram 2S | 1 | 1:15 | 44 | 14 | 2 | 0 | 284 | 519 | ---- | ---- |
| | Picloram 2S | 2 | 1:7 | 0 | 1 | 2 | 1 | 5 | 18 | ---- | ---- |
| | Roller | - | 1:7 | 26 | 151 | 308 | 33 | 1460 | 1148 | ---- | ---- |
| | Roller+oil conc. | - | 1:7 | 71 | 197 | 264 | 3 | 1241 | 947 | ---- | ---- |
| | Wick | - | 1:3 | 279 | 207 | 325 | 98 | 292 | 548 | ---- | ---- |
| | Wick+oil conc. | - | 1:3 | 291 | 159 | 200 | 82 | 591 | 774 | ---- | ---- |
| | Dicamba 4S | 4 | 1:7 | --- | --- | --- | --- | 811 | 2165 | ---- | ---- |
| | Dicamba 4S | 8 | 1:3 | --- | --- | --- | --- | 274 | 297 | ---- | ---- |
| | Control | --- | ---- | 557 | 538 | 872 | 496 | 1308 | 1469 | ---- | ---- |
| | LSD (0.05) | | | 138 | 246 | 502 | --- | 781 | 791 | ---- | ---- |

[a] Herbicide:water (v:v).

Picloram 2S at 2 lb/A provided the best leafy spurge control regardless of site. Spring evaluation showed that the treatment provided 99 or 100% control at all sites and stem counts ranged from 0 at Sheyenne to 18 at Minot after 1 year. Picloram 2S at 1 lb/A was less successful, especially at Tolna and Minot where control was rated at 65 and 80%, respectively. Fall evaluation revealed that the longevity of control ranged from 100% at Tolna to 63% at Sheldon.

The roller application of picloram at 1:7 (v:v) provided 90 and 97% leafy spurge control at Sheyenne and Valley City (fall applied), respectively, when evaluated in spring 1981. The picloram plus oil concentrate treatment provided slightly better control than picloram alone when fall applied at Valley City but leafy spurge control decreased when the oil concentrate was added at the other sites. The picloram plus oil concentrate treatment provided 91% control at Valley City when evaluated in the fall one year after roller application, but other roller applied treatments did not provide satisfactory control. The leafy spurge stand was reduced with the roller treatments at all sites except Tolna and Minot. The leafy spurge was very short at application at Minot and Tolna which greatly reduced the number of stems contacted by the roller and probably accounts for the reduced control.

Leafy spurge control with picloram at 1:3 (v:v) applied with the wick applicator ranged from 79% when spring applied at Valley City to 54% at Minot. As with the roller treatments, the oil concentrate decreased control at all sites except when fall applied at Valley City. The wick treatment did not provide satisfactory control when evaluated in the fall of 1981. Most wick treatments reduced the leafy spurge stand counts compared to the control.

Dicamba at 4 and 8 lb/A was applied at three sites. Dicamba at 4 lb/A did not provide good leafy spurge control. Dicamba at 8 lb/A reduced stand counts and control ranged from 75% at Tolna to 13% at Dickinson in fall 1981.

In summary, 2,4-D at 2 lb/A did not control leafy spurge after one year and the number of stems increased at several sites. Picloram 2%G and 2S at 2 lb/A gave excellent leafy spurge control after 1 year, but control decreased rapidly at several sites after 15 months. The roller and wick application of picloram provided significantly poorer control than broadcast application. The poor results from these applicator treatments may be due to the generally poor growing conditions in 1980. The leafy spurge was rather short and not growing vigorously so the short stems may not have been treated and herbicide translocation may have been poor in treated stems. Dicamba at 8 lb/A did reduce the stand count but gave only fair leafy spurge control.

*Reprinted with permission from: GPC-14 Annual Report: Leafy Spurge Control in the Great Plains. 1981. p. 22.*

*Published by: Great Plains Agricultural Committee.*

# Plant growth regulators and herbicides for leafy spurge control

RODNEY G. LYM and CALVIN G. MESSERSMITH

*Department of Agronomy, published with the approval of the Agriculture Experiment Station, North Dakota State University, Fargo, ND.*

An experiment was established near Walcott, ND to evaluate picloram plus chlorflurenol and bentazon plus mefluidide for leafy spurge control. The treatments were applied on 24 June 1981 and the leafy spurge was 12 to 15 inches tall and beginning seed set. The sky was overcast, 77º F, 70% relative humidity and the soil was 69º F at 1 and 2 inches. The herbicide and plant growth regulators (PGR) were applied as a tank mix using a tractor mounted sprayer that delivered 8.5 gpa at 35 psi. The plots were 10 by 35 feet, and treatments were replicated four times in a randomized complete block. Evaluations were based on percent stand reduction as compared to the control and results are shown in the table.

| Herbicide | Plant growth regulator | Rate (lb/A) | Control | |
|---|---|---|---|---|
| | | | 22 May 1981 | 19 Aug. 1981 |
| | | | % | |
| Picloram | | 0.375 | 77 | 14 |
| Picloram | ---- | 0.75 | 94 | 73 |
| Picloram | chlorflurenol | 0.375 + 1.0 | 83 | 18 |
| Picloram | chlorflurenol | 0.75 + 1.0 | 93 | 47 |
| Bentazon | ---- | 0.75 | 2 | 0 |
| Bentazon | ---- | | 5 | 0 |
| Bentazon | mefluidide | 0.75 + 0.375 | 14 | 0 |
| Bentazon | mefluidide | 1.5 + 0.75 | 15 | 0 |
| LSD (0.05) | | | 15 | 21 |

Picloram plus chlorflurenol controlled leafy spurge similar to picloram alone. Picloram at 0.375 lb/A alone and with chlorflurenol at 1.0 lb/A provided 77 and 83% control, respectively, when evaluated in May, but the control had decreased to 14 and 18%, respectively, by August. Picloram at 0.75 lb/A alone and in combination with chlorflurenol at 1.0 lb/A provided similar control of 94 and 93%, respectively, when evaluated in May 1981. However, by August 1981 the control ratings for picloram plus chlorflurenol had decreased to 47% which was significantly less than the 73% control with picloram alone. Neither bentazon alone nor in combination with mefluidide provided significant leafy spurge control. The herbicide plus PGR's combinations did not improve the leafy spurge control over herbicides applied alone. The PGR's may have made the plants more responsive to herbicide treatment if they had been applied several days before the herbicide rather than as a tank mix.

*Reprinted with permission from: GPC-14 Annual Report: Leafy Spurge Control in the Great Plains. 1981. pp. 23-27.*

*Published by: Great Plains Agricultural Committee.*

# Roller and wick application of picloram for leafy spurge control

RODNEY G. LYM and CALVIN G. MESSERSMITH

*Department of Agronomy, published with the approval of the Agriculture Experiment Station, North Dakota State University, Fargo, ND.*

Experiments were established to evaluate roller and wick application of picloram, as an economical alternative for leafy spurge control in pastureland. Leafy spurge control and the picloram soil residue after treatment were compared for conventional broadcast, roller and wick applications. Also, variable picloram concentrations and an additive with picloram were evaluated. The wick applicator is similar to the rope-wick applicator but uses a poly-foam backed canvas instead of the rope and delivers more volume of solution per acre for improved coverage in dense leafy spurge stands.

All experiments were a randomized complete block design with four replications, except the second experiment had five replications. The broadcast treatments were applied at 35 psi, and at 8.5 gpa for the first two experiments and 8 gpa for the last two experiments. The picloram concentrations with the roller and wick applicators varied from 1:1 to 1:15 picloram (Tordon 22K):water (v:v). The 1:7 concentration was comparable to picloram at 2 lb/A broadcast at 8 gpa (1 gal Tordon 22K:7 gal water). The roller and wick applicators were adjusted to treat the top half of the tallest leafy spurge. Evaluations were based on reduction of plant density as compared to the control.

The first experiment was established on September 22, 1978 near Valley City, ND with broadcast treatments of picloram compared to roller applications with and without a foam additive. The second experiment was established on October 3, 1979 near Walcott, ND with a similar objective as the first experiment except an additive with picloram was not used. The leafy spurge was 20 to 25 inches tall with senescent lower leaves but new fall growth on the stem tips for both experiments.

Picloram applied broadcast at 2 lb/A or with the roller applicator using the foam additive at either 1 or 3 mph gave similar results throughout the three years of observations (Table 1). Control was in the upper 90% range for these treatments in the May 1979 evaluations and then began a steady decline as the remaining plants reestablished in the plot area. In June 1981, 33 months after the treatments were applied, control ranged from 61 to 72%. The treatment applied at 3 mph without a foam additive consistently had the lowest control throughout the evaluation period. These data suggest that leafy spurge control by picloram may be due primarily to absorption and translocation within the plant soon after application and not the long soil residual of picloram.

For the second experiment, picloram broadcast at 2 lb/A provided 100% control in the year following treatment, and control had decreased slightly to 96% by the end of the second year (Table 2). The roller applied treatments and picloram at 1 lb/A broadcast provided similar leafy spurge control for one year, but the roller applied treatments were better 2 years after application. Leafy spurge control for the roller applied treatments was lower than comparable observations for the previous experiment. These treatments were applied when the leafy spurge had lost most of its leaves, the temperature was in the low 40ºs F and a killing frost occurred within 6 days. These treatment conditions suggest that picloram absorption and translocation was reduced by low weed vigor and cold conditions resulting in reduced control.

**Table 1. Leafy spurge control with picloram using the roller applicator near Valley City, ND for treatments applied September 22, 1978. (Lym and Messersmith).**

| Type of application | Additive | Rate[a] (lb/A) | Control May 31, 1979 | Aug. 29, 1979 | May 30, 1980 | Aug. 27, 1980 | June 23, 1981 |
|---|---|---|---|---|---|---|---|
| | | | (%) | | | | |
| Broadcast | None | 1 | 88 | 82 | 74 | 65 | 36' |
| Broadcast | None | 2 | 98 | 91 | 88 | 72 | 61 |
| Roller - 1 mph | None | 2 | 91 | 87 | 82 | 66 | 53 |
| Roller - 3 mph | None | 2 | 94 | 69 | 52 | 36 | 20 |
| Roller - 1 mph | Foam | 2 | 97 | 94 | 94 | 77 | 72 |
| Roller - 3 mph | Foam | 2 | 97 | 88 | 83 | 73 | 62 |
| Control | ---- | ---- | 0 | 0 | 0 | 0 | 0 |
| LSD (0-05) | | | 9 | 10 | 17 | 23 | 30 |

[a] Solution concentration on the roller was the same as 2 lb/A at 8.5 gpa broadcast.

**Table 2. Leafy spurge control with picloram using the roller applicator near Walcott, ND for treatments applied October 3, 1979. (Lym and Messersmith).**

| Type of Application | Rate[a] (lb/A) | Control May 8, 1980 | June 24, 1980 | May 22, 1981 | Aug. 19, 1981 |
|---|---|---|---|---|---|
| | | (%) | | | |
| Broadcast | 1 | 99 | 79 | 59 | 19 |
| Broadcast | 2 | 100 | 100 | 98 | 96 |
| Roller - 1 mph | 2 | 99 | 80 | 61 | 43 |
| Roller - 2 mph | 2 | 94 | 77 | 70 | 53 |
| LSD (0.05) | | 6 | 13 | 19 | 32 |

[a]Solution concentration on the roller was the same as 2 lb/A at 8.5 gpa broadcast.

The third experiment evaluated the most efficient picloram, concentration for use with the roller and wick applicators. Solution concentrations ranged from 1:1 to 1:15 picloram (Tordon 22K):water (v:v). An experiment was established in the spring on June 16, 1980 near Sheldon, ND and in the fall near Valley City, ND on September 2, 1980. The lowest solution concentration that gave adequate leafy spurge control was considered

the most efficient because it used less picloram per acre than a more concentrated solution. A 1:3 solution concentration seemed to be the most efficient for both applicators (Table 3). In general the fall treatment had better leafy spurge control than spring applications, but the experiments were not at the same site and there has been nearly two full growing seasons after the spring treatments.

**Table 3. Leafy spurge control with variable picloram concentrations using the roller and wick applicators with treatments applied on June 16, 1980 at Sheldon and September 2, 1980 at Valley City. (Lym and Messersmith).**

| | | Location/Evaluation date | | | |
|---|---|---|---|---|---|
| | | Sheldon | | Valley City | |
| Applicator | Picloram concentration[a] | May 26, 1981 | June 17, 1981 | Aug. 20, 1981 | Sept. 2, 1981 |
| | | % control | | | |
| Roller | 1:1 | 90 | 58 | 96 | 93 |
| Roller | 1:3 | 93 | 48 | 97 | 81 |
| Roller | 1:7 | 75 | 15 | 91 | 50 |
| Roller | 1:11 | 70 | 9 | 67 | 15 |
| Roller | 1:15 | 69 | 12 | 35 | 3 |
| Wick | 1:1 | 88 | 38 | 96 | 92 |
| Wick | 1:3 | 80 | 18 | 93 | 78 |
| Wick | 1:7 | 41 | 2 | 79 | 28 |
| Wick | 1:11 | 49 | 8 | 68 | 5 |
| Wick | 1:15 | 62 | 5 | 15 | 0 |
| LSD (0-05) | | 14 | 21 | 17 | 22 |

[a]Picloram (Tordon 22K):water (v:v).

A fourth experiment to evaluate the usefulness of additives with picloram when using the roller and wick applicators was established on June 12 and 16, 1980 near Sheldon. A surfactant and a petroleum based oil at 5% (v:v) were added to various picloram concentrations. Neithcr additive at any picloram concentration improved leafy spurge control over the same rate without an additive, and there was a trend for the additives to decrease control (Table 4).

Leafy spurge control for the third and fourth experiments that were established in 1980 generally was less than for the first and second experiments established in 1978 and 1979. Leafy spurge control in other experiments at the same locations as the 1980 experiments generally had lower weed control than other sites with comparable treatments, which suggests that location differences may have affected control. Also, 1980 was a dry year so many of the leafy spurge stems were shorter than normal. Perhaps the procedure of adjusting the roller and wick applicator height to treat the upper half of the tallest leafy spurge stems resulted in insufficient contact with the short weed stems to provide control comparable to the results of previous years.

**Table 4. Leafy spurge control with picloram plus additives using roller and wick applicators with treatments applied on June 12 and 16, 1980. (Lym and Messersmith).**

| Method | Picloram concentration[a] | Additive | | | |
|---|---|---|---|---|---|
| | | None | Surfel[b] | Oil[c] | Mean |
| | | % control | | | |
| Roller | 1:7 | 74 | 67 | 56 | 66 |
| | 1:11 | 48 | 45 | 37 | 43 |
| | 1:15 | 46 | 53 | 51 | 43 |
| Mean | | 56 | 55 | 48 | |
| LSD (0.05) =conc=16;add=16;concxadd=27 | | | | | |
| Wick | 1:3 | 76 | 77 | 81 | 78 |
| | 1:7 | 38 | 44 | 68 | 50 |
| | 1:11 | 45 | 50 | 57 | 51 |
| Mean | | 53 | 57 | 67 | |
| LSD (0.05) =conc=17;add=17;concxadd=29 | | | | | |

[a]Picloram (Tordon 22K):water (v:v).
[b]5% surfactant (v:v).
[c]5% oil(v:v) (83% paraffin base petroleum oil + 15% emulsifier).

A soil bioassay was conducted to determine the picloram residue from broadcast, roller, and wick applications. Plots from two adjacent experiments were sampled to obtain the full range of treatments shown in Table 5. Six soil samples to an 8-inch depth were taken from each plot in October which was 19 weeks after treatment. Sunflower height, and fresh and dry weight in a greenhouse bioassay were used to determine the picloram residual. The experimental design was completely random with three replications.

**Table 5. Estimates of the picloram residue in soil 19 weeks after application for treatments applied near Sheldon, ND in 1980 by a sunflower bioassay. (Lym and Messersmith).**

| Application method | Rate (lb/A)/ solution conc.(v:v) | Picloram residue (ppm) |
|---|---|---|
| Broadcast | 1 | 0.03 |
| Broadcast | 2 | 0.17 |
| Roller | 1:1 | 0.07 |
| Roller | 1:3 | 0.06 |
| Roller | 1:7 | 0.03 |
| Roller | 1:7 + 5% crop oil | 0 |
| Roller | 1:11 | 0 |
| Roller | 1:15 | 0.05 |
| Wick | 1:1 | 0.19 |
| Wick | 1:3 | 0.04 |
| Wick | 1:3 + 5% crop oil | 0.06 |
| Wick | 1.7 | 0 |
| Wick | 1:11 | 0 |
| Wick | 1:15 | 0.01 |
| Control | ---- | 0 |
| LSD (0.05) = 0.04 | | |

Picloram at 2 lb/A broadcast had a residual of 0.17 ppm and the wick application at 1:1 (v:v) was very similar with 0.19 ppm picloram residual (Table 5). Picloram at 1 lb/A broadcast had a residual of 0.03 ppm, and the residual was similar for 4 of 6 roller-applied treatments and 2 of 6 wick-applied treatments. Picloram from the roller and wick applied treatments could be reaching the soil through several methods including washing from treated plants, release through decomposition of treated stems and roots, and exudation from the roots of treated plants directly into the soil.

*Reprinted with permission from: GPC-14 Annual Report: Leafy Spurge Control in the Great Plains. 1981. p. 28.*

*Published by: Great Plains Agricultural Committee.*

# Leaf spurge – Control by glyphosate using three application techniques

RODNEY G. LYM and CALVIN G. MESSERSMITH

*Department of Agronomy, published with the approval of the Agriculture Experiment Station, North Dakota State University, Fargo, ND.*

An experiment to evaluate leafy spurge control by glyphosate applied by three techniques was established near Walcott, ND on August 1, 1980. The leafy spurge was 18 to 20 inches tall and had begun new fall growth. The temperature was 83º F, 66% relative humidity, the sky was overcast, and the soil temperature at 1 inch was 81º F. Glyphosate was applied with a tractor-mounted sprayer that delivered 8.5 gpa at 35 psi, a controlled droplet applicator (CDA) which delivered approximately 0.85 gpa, and with a pipe wick applicator which delivered approximately 2.25 gpa depending upon stand density. The plots were 10 by 30 feet in a randomized complete block design with three replications. Evaluations were based on stand reduction as compared to the control.

| | Solution | | Control | |
|---|---|---|---|---|
| Method | Ratio[a] | lb/A | May 22, 1981 | Aug. 19, 1981 |
| | | | % | |
| Broadcast | 1:11 | (2.0) | 98 | 88 |
| Broadcast | 1:23 | (1.0) | 98 | 83 |
| Broadcast | 1:31 | (0.75) | 95 | 78 |
| CDA | 1:11 | (0.2) | 78 | 55 |
| CDA | 1:23 | (0.1) | 31 | 28 |
| CDA | 1:31 | (0.075) | 56 | 25 |
| Wick | 1:11 | (0-5) | 85 | 79 |
| Wick | 1:23 | (0.25) | 80 | 40 |
| Wick | 1:31 | (0.125) | 69 | 8 |
| LSD (0.05) | | | 33 | 38 |

[a]Glyphosate (Roundup):water (v:v)

Glyphosate at 0.75, 1.0 and 2.0 lb/A broadcast applied provided 95, 98, and 98%, leafy spurge control, respectively, when evaluated on May 22, 1981. The perennial plants in these plots had been killed and a thick mat of leafy spurge seedlings had germinated. Most of the seedlings died by August 19, but enough seedlings survived so that the overall control declined 10 to 17%.

Glyphosate provided better leafy spurge control when broadcast than CDA or wick applied. However, the grass in these plots was not severely damaged and provided competition for emerging seedlings. Although the glyphosate rate actually applied had been reduced approximately 90 and 25% with the CDA and wick applicators, respectively, leafy spurge control was not decreased by a similar magnitude. A follow-up treatment is needed to control leafy spurge seedlings regardless of the glyphosate application technique.

*Reprinted with permission from: GPC-14 Annual Report: Leafy Spurge Control in the Great Plains. 1981. p. 29.*

*Published by: Great Plains Agricultural Committee.*

# Picloram formulations and application equipment for leafy spurge control

RODNEY G. LYM and CALVIN G. MESSERSMITH

*Department of Agronomy, published with the approval of the Agriculture Experiment Station, North Dakota State University, Fargo, ND.*

Several experiments were established to evaluate four picloram formulations for leafy spurge control. Formulations evaluated included picloram 2S (Tordon 22K), M-4505, M-4506 and picloram plus 2,4-D at 1 plus 2 lb/gal (Tordon 212). Formulations were evaluated using broadcast, roller, controlled droplet applicator (CDA), and two types of pipe wick applicators (one covered with polyfoam and canvas, and the other with Nylafoam, a polyfoam with bristles attached to one side used for painting). The broadcast treatments were applied with a tractor-mounted sprayer that delivered 8.5 gpa at 35 psi, the CDA delivered approximately 0.85 gpa with the pipe-wick applicator approximately 2.25 gpa and the roller applicator approximately 4.5 gpa. All plots were 10 by 30 ft and replicated four times in a randomized complete block. The broadcast experiment was established on 24 June 1980 near Walcott, ND with a tractor sprayer while all other experiments were established on 21 and 22 July 1980 near Sheldon, ND. All experiments were evaluated on 22 May 1981 and the broadcast experiment was reevaluated on 19 August 1981. All evaluations were based on stand reduction as compared to the control.

| Picloram formulation | Solution[a] Ratio/lb/A | | Application/method | | | | | | |
|---|---|---|---|---|---|---|---|---|---|
| | | | | | | | Broadcast | | |
| | | | Roller | Canvas wick | Nylafoam wick | CDA | May | Aug. | Mean[b] |
| | | | (% control) | | | | | | |
| Picloram 2S | 1:7 | (1.0) | 0 | 37 | 70 | 22 | 91 | 85 | 44 |
| M-4505 | 1:7 | (1.0) | 5 | 52 | 68 | 29 | 98 | 69 | 50 |
| M-4505 | 1:11 | (0.5) | 5 | 28 | 48 | 19 | 93 | 43 | 39 |
| M-4506 | 1:7 | (1.0) | 0 | 51 | 52 | 25 | 96 | 66 | 45 |
| M-4506 | 1:11 | (0.5) | 0 | 44 | 52 | 43 | 95 | 18 | 47 |
| Picloram+2,4-D[c] | 1:7 | (1.0+2.0) | 5 | 38 | 53 | 18 | 93 | 44 | 41 |
| Picloram+2,4-D[c] | 1:11 | (0.5+1.0) | 5 | 24 | 53 | 9 | 85 | 7 | 35 |
| LSD (0-05) | | | | 17 | 24 | 27 | 10 | | |
| Mean | | | 3 | 39 | 57 | 55 | 93 | 33 | |
| LSD (0-05) Application method=10; Picloram formulation=12 | | | | | | | | | |

[a]Solution was herbicide:water (v:v) in all except broadcast spray which was calculated in lb/A.
[b]Mean does not include the conventional broadcast treatment data of 19 August 1981.
[c]Tordon 212 (picloram at 1 lb/gal+2,4-D at 2 lb/gal).

The roller-applied treatments did not control leafy spurge regardless of picloram formulation. M-4505 and M-4506 at 1:7 (v:v) tended to provide better control than picloram 2S when applied with the canvas wick, but these differences were not observed with the Nylafoam wick or CDA. All broadcast treatments except the picloram plus 2,4-D at 0.5 plus 1.0 lb/A provided over 90% control when evaluated on 22 May 1980, but only picloram 2S with 85% control provided satisfactory results on 19 August 1981. The best leafy spurge control with all picloram formulations occurred with the broadcast application. Picloram applied by Nylafoam wick and CDA provided fair control but a higher herbicide rate would be needed to give satisfactory control. Leafy spurge control was not improved with picloram formulations other than the present commercial picloram 2S (Tordon 22K) formulation.

*Reprinted with permission from: GPC-14 Annual Report: Leafy Spurge Control in the Great Plains. 1981. pp. 30-31.*

*Published by: Great Plains Agricultural Committee.*

# A pipe-wick herbicide applicator for perennial weed control in pastures

CALVIN G. MESSERSMITH and RODNEY G. LYM

*Department of Agronomy, published with the approval of the Agriculture Experiment Station, North Dakota State University, Fargo, ND.*

A pipe-wick applicator was designed to provide a greater herbicide flow rate than rope-wick applicators for perennial weed control experiments in pastures. The pipe-wick was mounted on a frame so a tractor 3-point hitch could be used for height control (Figure 1). Two wick bars were spaced 1 ft apart for double coverage of the weeds. The pipe-wick consists of 0.75 inch PVC pipe with 0.12 inch holes drilled every 2 inches and covered with a wicking material (Figure 2). The wicking material was wrapped around about 75% of the pipe circumference and attached to the PVC pipe with contact cement. Liquid in the storage tank flows into the wick with flow rate dependent on weed density. A preliminary screening of 20 wick materials to cover the PVC pipe was conducted in the lab and greenhouse. Materials were evaluated according to ability to transfer (wick) herbicide onto plants, resistance to dripping, durability, and ease of obtaining material.

Four materials were chosen for the field study: canvas (50% cotton-50% polyester) over 1-inch wide by 0.5 inch thick polyfoam; Nylafoam, a polyfoam material covered with 0.25-inch bristles used to paint shake shingles (Padco Inc.) Minneapolis, MN); dacron (G7 plain weave fabric #718 from Testfabrics, Inc., Middlesex, NJ) over 1-inch wide by 0.5-inch thick polyfoam; and a fabric belt, 1.5 inches wide. The field experiment was established on June 20, 1980 near Sheldon, ND when leafy spurge was fully flowered and 20 to 26 inches tall. Picloram (Tordon 22K):water solution concentrations of 1:7, 1:11, and 1:15 (v:v) were applied using 3 ft wide rectangular wicks. Plots were 5 by 30 ft and replicated four times in a randomized complete block design. Evaluations on May 29, 1980 were based on percent stand reduction as compared to the control.

| Wick Material | Picloram Concentration | | | |
|---|---|---|---|---|
| | 1:7 | 1:11 | 1:15 | Mean |
| | (% control) | | | |
| Canvas | 13 | 12 | 5 | 10 |
| Nylafoam | 63 | 38 | 17 | 39 |
| Dacron | 6 | 5 | 4 | 5 |
| Fabric belt | 0 | 0 | 2 | 0 |
| Mean | 21 | 13 | 7 | |

LSD (0.05)=Materials=8; Conc.=7; Material x Conc.=12

Nylafoam was the most effective material for wicking picloram onto leafy spurge. However, field observations revealed that Nylafoam was easily torn by woody stems and shrubs commonly found in pastures. The canvas with polyfoam backing was chosen for further evaluation, because it seemed durable and tended to provide better control than the dacron material. The fabric belt was unacceptable as a wicking material.

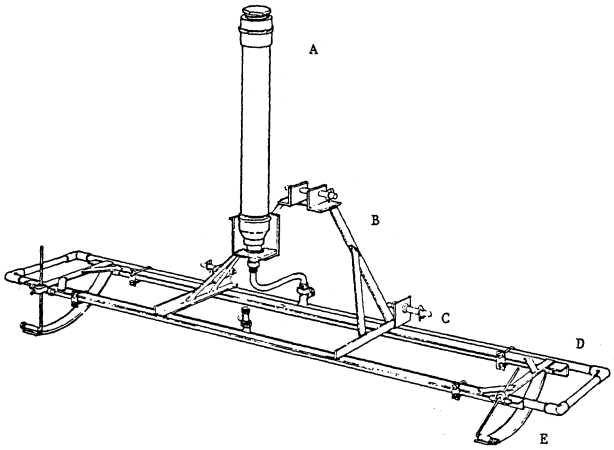


**Figure 1. Pipe-wick herbicide applicator and frame with:**

**(A) storage tank,**

**(B) 3-point hitch assembly.**

**(C) angle iron frame,**

**(D) 0.75-inch PVC pipe held to frame by U-clamps, and**

**(E) skids for height control.**

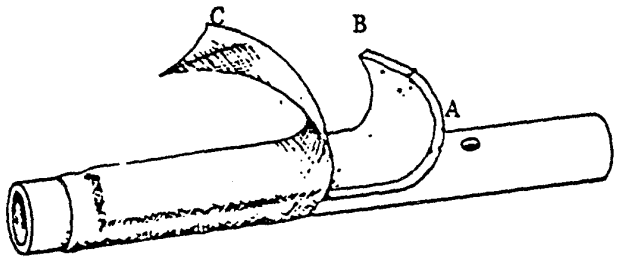


**Figure 2. Bottom view of a section of the pipe-wick applicator showing:**

**(A) 0.12 inch holes covered by**

**(B) 0.5 inch polyfoam covered by**

**(C) canvas.**

*Reprinted with permission from: GPC-14 Annual Report: Leafy Spurge Control in the Great Plains. 1981. pp. 32-33.*

*Published by: Great Plains Agricultural Committee.*

# Leafy spurge control using the controlled droplet applicator with picloram plus additives

RODNEY G. LYM and CALVIN G. MESSERSMITH

*Department of Agronomy, published with the approval of the Agriculture Experiment Station, North Dakota State University, Fargo, ND.*

Several experiments were established to evaluate leafy spurge control with picloram using the controlled droplet applicator (CDA). The CDA is designed to deliver herbicide in a precise spray pattern with a uniform droplet size of 200-microns. The CDA delivers much less herbicide per acre than the conventional broadcast sprayer. Thus the CDA would be a more economical method of application if control were comparable to conventional broadcast application.

The first experiment was established near Walcott, ND on 30 June 1980. The weather was dry and 72º F, 64% relative humidity, and 82º F soil temperature at one inch. The leafy spurge was 20 to 30 inches tall and the soil was moist. Picloram was applied to leafy spurge in picloram:water (v:v) solution concentrations ranging from 1:1 to 1:15. A surfactant (Surfel) and an oil (85% paraffin base petroleum oil plus 15% emulsifier) were added at a 5% concentration (v:v). The CDA was calibrated to deliver 60 ml/min for all solution concentrations. The spray width of the hand-held CDA was 4 ft and the plot size was 5 by 30 ft replicated four times in a randomized complete block design. Evaluation was based on stand reduction as compared to the control.

The solution concentration of 1:1 delivered approximately 0.1 lb/A of picloram. The 1:1 treatment provided 79% control when averaged across all additives which was significantly higher than any other treatment when evaluated 11 months after application (Table 1). Leafy spurge control was not improved by including a surfactant or oil additive. By August 1981, leafy spurge control for the 1:1 treatments had decreased to 53%, and all other treatments showed similar decreases.

An experiment to evaluate leafy spurge control with picloram alone using the CDA was established at two sites. The first site was near Minot, ND and the experiment was established on 10 July 1980 with the leafy spurge 6 to 12 inches tall and under drought stress. The soil temperature at 1 inch was 82º F, 69% relative humidity, and 79º F at treatment and 102º F later in the day. The second site was near Dickinson, ND where the leafy spurge was 10 to 12 inches tall and drought stressed. The experiment was established on 15 July 1980 with conditions of 65º F, 51% relative humidity, and 70º F soil temperature at 1 inch. The plots were 10 by 30 feet and replicated four times in a randomized complete block design.

Leafy spurge control varied at these sites (Table 2). Picloram at 1:1 and 1:3 concentrations gave 35 and 31% control, respectively, at Dickinson, and 90% and 0% control, respectively, at Minot. The results from Dickinson are similar to the August evaluations at Walcott. The large difference in the control between Minot and the other two sites may be due to an environmental effect. Both the Dickinson and Minot sites were under drought stress but the air was very hot and dry after treatment at Minot which may have reduced picloram absorption.

Leafy spurge control by picloram using the CDA applicator was fair at the highest solution concentration tested. The light weight and ease of operation of the CDA is an advantage of the equipment over the traditional hand held sprayer for use in special situations like shelterbelts and spot treatments. Further research is necessary to evaluate the effectiveness of the CDA.

**Table 1. Leafy spurge control using the CDA applicator with picloram plus additives – Walcott, ND. (Lym and Messersmith).**

| Evaluation date | Picloram concentration[a]/(lb/A) | | Additive/control | | | |
|---|---|---|---|---|---|---|
| | | | None | Surfactant[b] | Oil[c] | Mean |
| | | | (%) | | | |
| 22 May 1981 | 1:1 | 0.1 | 70 | 84 | 84 | 79 |
| | 1:3 | 0.025 | 70 | 66 | 43 | 60 |
| | 1:7 | 0.0125 | 51 | 64 | 56 | 57 |
| | 1:11 | 0.008 | 20 | 46 | 29 | 32 |
| | 1:15 | 0.00625 | 43 | 28 | 43 | 38 |
| LSD (0.05)=Conc=19; Add=14; Conc x Add=33 | | | | | | |
| 19 Aug. 1981 | 1:1 | 0.1 | 34 | 70 | 56 | 53 |
| | 1:3 | 0.025 | 29 | 19 | 11 | 19 |
| | 1:7 | 0.0125 | 3 | 4 | 13 | 7 |
| | 1:11 | 0.008 | 0 | 0 | 1 | 0 |
| | 1:15 | 0.00625 | 0 | 0 | 0 | 0 |
| LSD (0.05)=Conc=13; Add=10; Conc x Add=22 | | | | | | |

[a]Picloram (Tordon 22K):water (v:v).
[b]5% surfactant (Surfel) (v:v).
[c]5% oil (v:v) (83% paraffin base petroleum oil + 15% emulsifier).

**Table 2. Leafy spurge control with picloram using the controlled droplet applicator, Dickinson and Minot, ND. (Lym and Messersmith).**

| Solution concentration[a](lb/A) | | Control | | |
|---|---|---|---|---|
| | | Dickinson | Minot | |
| | | 25 Aug. 1981 | 11 June 1981 | 15 Sept. 1981 |
| | | (%) | | |
| 1:1 | (0.1) | 35 | 97 | 90 |
| 1:3 | (0.025) | 31 | 0 | 0 |
| 1:7 | (0.0125) | 16 | 0 | 0 |
| 1.11 | (0.008) | 0 | 0 | 0 |
| 1:15 | (0.006) | 6 | 0 | 0 |
| LSD (0.05) | | 16 | | -- |

[a]Picloram (Tordon 22K):water (v:v).

*Reprinted with permission from: GPC-14 Annual Report: Leafy Spurge Control in the Great Plains. 1981. pp. 34-35.*

*Published by: Great Plains Agricultural Committee.*

# Leafy spurge control with picloram and glyphosate under trees

RODNEY G. LYM and CALVIN G. MESSERSMITH

*Department of Agronomy, published with the approval of the Agriculture Experiment Station, North Dakota State University, Fargo, ND.*

Leafy spurge control is a major problem in wooded areas, shelterbelts, and parks. Glyphosate can be safely used under trees with leafy spurge control generally ranging from 80 to 90% when the herbicide is fall applied. Two disadvantages of glyphosate are its nonselective nature and a retreatment with 2,4-D is required the following year to control seedlings. Picloram effectively controls leafy spurge, but it is toxic to deciduous trees, especially shallow-rooted trees which are often found in draws and run-off areas. The controlled droplet applicator (CDA) is designed to deliver herbicides in precisely measured droplets, and generally delivers less herbicide per acre than conventional sprayers. The purpose of these experiments was to evaluate the CDA for safely applying picloram and glyphosate on leafy spurge growing under trees. Also picloram was applied using a two-foot wide hand-held pipe wick covered by polyfoam and canvas. Picloram (Tordon 22K):water and glyphosate (Roundup):water concentrations varied for 1:1 to 1:15 (v:v) with both applicators. The experiments were established in a tree grove, with many saplings and 2- to 3-inch diameter young trees, which had been infested with leafy spurge. Each plot was approximately 10 by 30 ft in a randomized complete block design. The treatments were applied on 28 July 1980 under a partly cloudy sky, 78º F, and 50% relative humidity. The data are reported in the table.

Leafy spurge control with picloram at 1:1, 1:3, and 1:7 (v:v) applied by the CDA was very good when evaluated on 22 May 1981, but dropped dramatically by 19 August 1981. Picloram at 1:1 and 1:3 (v:v) severely damaged the young saplings in several plots and killed several trees at 1:1 (v:v).

Glyphosate at 1:1 (v:v) provided 87% control of leafy spurge the following spring, which is similar to the control normally obtained with glyphosate at 1 lb/A broadcast. However, leafy spurge seedlings quickly reestablished in all plots because a follow-up treatment was not applied. The other glyphosate treatments did not provide satisfactory control.

Leafy spurge control was very good with picloram at 1:1, 1:3, and 1:7 (v:v) applied by the hand-held wick when evaluated on 22 May 1981, but control decreased rapidly by 19 August 1981. It was expected that these treatments would not harm the trees. However, picloram at 1:1, 1:3 and 1:7 (v:v) caused severe leaf damage to all the saplings and larger trees, and most of the saplings were killed by picloram at 1:1 (v:v) by the end of the summer. Since picloram was not applied to the soil, perhaps the herbicide was exu-

dated by the leafy spurge roots or released as the weed roots decayed. Tree damage generally was greater following wick than CDA application.

The CDA may be useful in trees, because fair leafy spurge control was obtained and the equipment is lightweight and easy to operate. Further research is needed with the CDA to better assess the risk of damage to small and large trees. The hand-held wick was judged unsatisfactory due to tree damage and difficult handling in wooded areas.

**Table. Leafy spurge control by picloram and glyphosate applied with the controlled droplet and wick applicators under trees — Walcott, ND. (Lym and Messersmith).**

| Applicator | Herbicide | Herbicide concentration[a] | Control | |
|---|---|---|---|---|
| | | | 22 May 1981 | 19 Aug. 1981 |
| CDA | Picloram | 1:1 | 93* | 66** |
| | Picloram | 1:3 | 92* | 23* |
| | Picloram | 1:7 | 96 | 23 |
| | Picloram | 1:11 | 76 | 2 |
| | Picloram | 1:15 | 56 | 0 |
| LSD (0.05) | | | 24 | 35 |
| CDA | Glyphosate | 1:1 | 86 | 0 |
| | Glyphosate | 1:3 | 23 | 0 |
| | Glyphosate | 1:7 | 54 | 0 |
| | Glyphosate | 1:11 | 36 | 0 |
| | Glyphosate | 1.15 | 16 | 0 |
| LSD (0.05) | | | 37 | |
| Wick | Picloram | 1:1 | 85* | 61** |
| | Picloram | 1:3 | 89* | 34* |
| | Picloram | 1:7 | 85* | 5 |
| | Picloram | 1:11 | 48 | 0 |
| | Picloram | 1:15 | 68 | 0 |
| LSD (0.05) | | | 33 | 36 |

[a] Herbicide:water (v:v).
* Damaged trees,
** Trees killed in at least one of the four plots.

*Reprinted with permission from: GPC-14 Annual Report: Leafy Spurge Control in the Great Plains. 1981. pp. 36-38.*

*Published by: Great Plains Agricultural Committee.*

# Granular picloram and dicamba for leafy spurge control

RODNEY G. LYM and CALVIN G. MESSERSMITH

*Department of Agronomy, published with the approval of the Agriculture Experiment Station, North Dakota State University, Fargo, ND.*

Granular and liquid formulations of picloram and dicamba were compared for leafy spurge control in five experiments established on June 25 near Valley City, July 2 near Tolna, July 10 near Minot, and July 15, 1980 near Dickinson, ND and on September 3, 1980 near Valley City. An experiment to compare liquid and granular picloram in a sandy soil was established on June 11, 1980 in the Sheyenne National Grasslands near McLeod, ND. All experiments were in a randomized complete block design with four replications and 10 by 30 ft plots. The granules were applied uniformly by hand, while the liquid formulations were applied with a tractor-mounted plot sprayer at 8 gpa. Evaluations were based on percent stand reduction compared to the control. The ANOVA test revealed that there was highly significant interaction between site and treatments. Therefore, experimental sites will be discussed individually.

At Valley City leafy spurge control from equal picloram rates gave similar leafy spurge control regardless of application date (Table 1). Picloram 2%G at 1 lb/A was less effective than higher rates for both application dates. Dicamba 4S and 5%G, spring and fall treatments provided similar control when evaluated one year after application. Dicamba 4S and 5%G at 8 lb/A gave between 91 and 100% control when evaluated one year after treatment. Leafy spurge control from spring-applied dicamba declined rapidly during the summer of 1981. Fall-applied dicamba 4S at 8 lb/A and dicamba 5%G at 6 and 8 lb/A gave very similar control to picloram at 2 lb/A one year later, but dicamba was less effective than picloram when spring applied.

Leafy spurge control at Valley City generally was better than at the other sites. At Tolna, picloram 2S at 2 lb/A and 2%G at 1.5 and 2 lb/A provided 95, 98 and 100% leafy spurge control, respectively, when evaluated 14 months after treatment (Table 1). Dicamba 4S at 8 lb/A gave 89% control, but the 5%G treatments did not provide comparable control. At Minot, picloram 2S and 2%G at 2 lb/A provided 85 and 81% control, respectively, when evaluated 14 months later, but the other treatments did not provide satisfactory control. At Dickinson, only picloram 2S at 2 lb/A provided satisfactory control at 91%.

**Table 1. Leafy spurge control using granular picloram and dicamba applied in 1980 at various locations in North Dakota. (Lym and Messersmith).**

| | | Location/Evaluation date | | | | | | | | |
|---|---|---|---|---|---|---|---|---|---|---|
| | | Valley City | | | | | | | | Dickin- |
| | Rate | Spring | | Fall | | Tolna | | Minot | | son |
| Herbicide | (lb/A) | 6-17-81 | 9-2-81 | 6-17-81 | 9-2-81 | 6-8-81 | 9-9-81 | 6-11-81 | 9-15-81 | 8-25-81 |
| | | % | | | | | | | | |
| Picloram 2%G | 1 | 97 | 80 | 95 | 86 | 79 | 60 | 72 | 28 | 56 |
| Picloram 2%G | 1.5 | 98 | 89 | 99 | 100 | 88 | 98 | 85 | 30 | 74 |
| Picloram 2%G | 2 | 99 | 98 | 100 | 100 | 98 | 100 | 96 | 81 | 74 |
| Dicamba 5%G | 4 | 74 | 55 | 94 | 74 | 31 | 5 | 19 | 0 | 4 |
| Dicamba 5%G | 6 | 82 | 54 | 96 | 99 | 44 | 10 | 56 | 20 | 30 |
| Dicamba 5%G | 8 | 91 | 75 | 99 | 100 | 70 | 57 | 66 | 27 | 39 |
| Picloram 2S | 2 | 100 | 99 | 100 | 100 | 100 | 95 | 98 | 85 | 91 |
| Dicamba 4S | 8 | 94 | 74 | 99 | 99 | 88 | 89 | 61 | 5 | 42 |
| LSD (0.05) | | 9 | 14 | 3 | 10 | 18 | 15 | 20 | 30 | 26 |

Picloram 2S and 2%G at equal rates provided similar leafy spurge control when evaluated on the sandy soil of the Sheyenne National Grasslands (Table 2). Picloram 2S and 2%G at 2 lb/A provided 99 and 98% control, respectively, but the other treatment did not give satisfactory control when evaluated 14 months after treatment.

Dicamba and picloram granular and liquid formulations generally provided similar leafy spurge control when compared at equal application rates. The comparably poor leafy spurge control at Minot and Dickinson may be due to unfavorable environmental conditions. The entire state of North Dakota received below normal precipitation and above normal temperatures in both 1979 and 1980 (Table 3). Dickinson and Minot, where the lowest average control occurred had the highest above normal temperature during the growing season and the first and third greatest precipitation deficit for 1979 through July 30, 1980 of -9.59 and -5.33 inches, respectively (Table 3). Valley City had a deficit of 9.06 inches of annual precipitation, but rain showers just before and after the treatment dates may have accounted for the improved control at this site. All sites received above normal precipitation beginning in August 1980, and the trend continued into June 1981 which provided favorable growing conditions for leafy spurge. The poor growing conditions during application followed by favorable conditions in 1981 probably account for the general trend of inadequate leafy spurge control.

**Table 2. Leafy spurge control using picloram, liquid and granules on a sandy soil in the Sheyenne National Grasslands. (Lym and Messersmith).**

| Herbicide formulation | Rate (lb/A) | May 27, 1981 | Aug. 19, 1981 |
|---|---|---|---|
| | | % | |
| Picloram 2S | 0.5 | 73 | 13 |
| Picloram 2S | 1.0 | 98 | 73 |
| Picloram 2S | 2.0 | 100 | 99 |
| Picloram 2%G | 0.5 | 53 | 5 |
| Picloram 2%G | 1.0 | 97 | 72 |
| Picloram 2%G | 2.0 | 100 | 98 |
| LSD (0.05) | --- | 25 | 12 |

**Table 3. Average annual 1979 and 1980 precipitation and temperature departure from normal for various locations in North Dakota. (Lym and Messersmith).**

| | Departure from normal | | | |
|---|---|---|---|---|
| | Precipitation | | | Temperature |
| Location[a] | 1979 | Jan-July 1980 | Aug-Dec 1980 | 1980 (April-July) |
| | inch | | | F |
| Dickinson | -3.63 | -5.96 | +2.64 | +6 |
| Minot | -1.21 | -4.12 | +7.50 | +6 |
| Sheldon | -1.11 | -1.04 | +0.21 | +4 |
| Tolna | -2.85 | -1.43 | 4.12 | +5 |
| Valley City | -4.05 | -5.01 | +2.54 | +3 |

[a] The climatological data is recorded from the nearest reporting station to the experimental site.

*Reprinted with permission from: GPC-14 Annual Report: Leafy Spurge Control in the Great Plains. 1981. p. 39.*
*Published by: Great Plains Agricultural Council.*

# Tebuthiuron applied spring and fall for leafy spurge control

RODNEY G. LYM and CALVIN G. MESSERSMITH

*Department of Agronomy, published with the approval of the Agriculture Experiment Station, North Dakota State University, Fargo, ND.*

An experiment was established near Valley City, ND to evaluate tebuthiuron for leafy spurge control. Tebuthiuron as 10 or 20% pellets was applied by hand as spring or fall treatments. The fall treatments were applied on 25 Sept. 1980 when the leafy spurge had vigorous fall growth from previous fall rains. The summer had been very dry and the plants had been drought stressed for most of the growing season. The spring application was made on 18 May 1981 when the soil was very dry, the leafy spurge was 2 to 4 inches tall and emerged stems were sparse. The experimental plots were 10 by 20 ft and replicated twice in a randomized complete block design. The plots were evaluated on 2 Sept. 1981 and data are shown in the table.

| Time of application | Tebuthiuron pellet formulation | Rate (lb/A) | Control |
|---|---|---|---|
| | % | | (%) |
| Fall | 19 | 0.5 | 0 |
| Fall | 16 | 1.0 | 35 |
| Fall | 10 | 1.5 | 10 |
| Fall | 20 | 0.5 | 30 |
| Fall | 20 | 1.0 | 95 |
| Fall | 20 | 1.5 | 58 |
| Spring | 10 | 0.5 | 0 |
| Spring | 10 | 1.0 | 0 |
| Spring | 10 | 1.5 | 0 |
| Spring | 20 | 0.5 | 35 |
| Spring | 20 | 1.0 | 10 |
| Spring | 20 | 1.5 | 73 |
| LSD (0.05) | | | 56 |

Leafy spurge control with tebuthiuron varied widely within most treatments. The only treatment that provided good leafy spurge control consistently was tebuthiuron 20%G at 1 lb/A fall applied which gave 95% control. Other treatments did provide over 90% control in one replication, but nearly zero in the other. Tebuthiuron at 1 and 1.5 lb/A severely damaged the grasses regardless of formulation.

The large variation in leafy spurge control by tebuthiuron could be due to the dryness the year in which the experiment was established. However, the severe damage to the native grasses probably makes tebuthiuron unsuitable for leafy spurge control in most situations.

*Reprinted with permission from: GPC-14 Annual Report: Leafy Spurge Control in the Great Plains. 1981. pp. 40-54.*

*Published by: Great Plains Agricultural Council.*

# Leafy spurge

R. E. VORE and H. P. ALLEY

## Live shoot regrowth evaluation

Evaluations of original treatments, retreatments and combinations, revealed leafy spurge regrowth in all original treatment areas three years after the experiment was established. All retreatments have maintained or improved on the initial top growth control provided by original treatments.

Original treatments in three Wyoming locations have been evaluated, one year after application. As an average of all locations, Banvel at 6.0 and 8.0 lb/A provided 82 and 90% control, respectively. Tordon at 1.0 and 2.0 lb/A provided 97 and 99% control, respectively. Spring versus fall applications were compared in Fremont County. When applied in the fall, Banvel 5G was more effective than Banvel 4L. Tordon 22K was more effective as a spring treatment than Banvel 4L.

## Root evaluation

Root control evaluations were continued in 1981 with selected original treatments, retreatments and combinations being monitored. The root system was found to be greater in the top 8 inches of soil and decreased with depth. All treatments and combinations reduced root weight in all soil depths.

## Forage production evaluation

Forage production was measured in original treatment areas established in 1978. An average of production for the past three years shows that the areas treated with Tordon at 2.0 lb/A produced the most air dry forage per acre. All treatments have annually produced more forage than the check. Average production in treatment areas was 290 to 892 pounds per acre more than the check.

UNIVERSITY OF WYOMING
WEED SCIENCE

CROP OR WEED Leafy spurge (Euphorbia esula L.)
EXPERIMENT Live shoot regrowth evaluations
LOCATION Driskill ranch - Crook County

APPLICATION METHOD mechanical, hand VOL/A 29 GAL [X] FULL COVERAGE
PLOT SIZE 21.5 x 258 ft REPLICATIONS 1 [ ] BAND ____ INCHES
DESIGN complete random
EQUIPMENT truck sprayer, fert. spreader NOZZLE TeeJet HSS 8004 PSI 40
PREPLANT DATE ____ HOUR ____
SURFACE SOIL MOISTURE ____ IN SUBSOIL MOISTURE ____ IN
SURFACE SOIL CONDITION - CLODS ____ SURFACE PLANT MATERIAL ____
POSTEMERGENCE DATE May 15, 1980 HOUR 9:00 - 11:00 a.m. MDT
SURFACE SOIL MOISTURE dry to 1 IN SUBSOIL MOISTURE intermediate IN
CROP STAGE/HEIGHT ____ CROP CONDITION ____
WEEDS STAGE/HEIGHT bud to full flower/4-14 in.

INCORPORATION DATE ____ IMPLEMENT ____
HOURS AFTER HERBICIDE APPLICATION ____ DEPTH ____ IN
WEATHER AIR TEMP. 67 F RELATIVE HUMIDITY 42 % WIND N MPH 0-2
SKY partly cloudy SOIL TEMP.: SURFACE 65 F 1" 62 F 2" 55 F 4" 52 F
SOIL TEXTURE sandy loam SAND 55.4% SILT 32.2% CLAY 12.4% O.M. 0.6 % pH 7.8
CROP PLANTING DATE ____ VARIETY ____ ROW WIDTH ____ IN
SEED DEPTH ____ IN SOIL MOISTURE FOR SEED ____ TILTH/CLOD SIZE ____ IN
SEEDBED PREPARATION ____ STUBBLE OR TRASH ____
POST-PLANTING TILLAGE ____
IRRIGATION ____
PREVIOUS CROP rangeland PREVIOUS PESTICIDES none
EVALUATIONS DATE/DATA May 19, 1981: shoot counts
HARVEST DATE/DATA ____
FACTORS AFFECTING THE EXPERIMENT

Experimental site located on first alluvial bench of the Belle Fourche River. 6.09 inches of precipitation from time of application until September 23, 1980.

## CROP RESPONSE

No apparent damage to grass; however, more prostrate and green later in treatment areas than in check area.

## WEED CONTROL

Banvel at 8.0 lb/A and Tordon at 1.0 and 2.0 lb/A provided 94 to 100% control after one year. Banvel at 6.0 lb/A controlled top growth at 74 and 80%. Banvel at 6.0 lb/A was less effective than the 8.0 lb/A rate. Banvel 4L was less effective at both rates than Banvel 5G. See Table 48.

UNIVERSITY OF WYOMING
WEED SCIENCE

CROP OR WEED Leafy spurge (Euphorbia esula L.)
EXPERIMENT Live shoot regrowth evaluations
LOCATION Hallam ranch - Fremont County

APPLICATION METHOD mechanical, hand VOL/A 25 GAL [X] FULL COVERAGE [ ] BAND ____ INCHES
PLOT SIZE 21.5 x 258 ft REPLICATIONS 2
DESIGN split block
EQUIPMENT truck sprayer, fert. spreader NOZZLE TeeJet HSS 8004 PSI 40

PRE EMERGENCE DATE ____ HOUR ____
SURFACE SOIL MOISTURE ____ IN SUBSOIL MOISTURE ____ IN
SURFACE SOIL CONDITION - CLODS ____ SURFACE PLANT MATERIAL ____
WEATHER AIR TEMP. ____ F RELATIVE HUMIDITY ____ % WIND ____ MPH ____
SKY ____ SOIL TEMP.: SURFACE ____ F 1" ____ F 2" ____ F 4" ____ F

POSTEMERGENCE DATE May 23, 1980 HOUR 5:00 - 6:30 p.m. MDT
SURFACE SOIL MOISTURE dry IN SUBSOIL MOISTURE wet IN
CROP STAGE/HEIGHT grass green CROP CONDITION ____
WEEDS STAGE/HEIGHT bud to full flower/4-18 in.

WEATHER AIR TEMP. 63 F RELATIVE HUMIDITY 79 % WIND NW MPH 4-6
SKY partly cloudy SOIL TEMP.: SURFACE 62 F 1" 63 F 2" 64 F 4" 65 F

POSTEMERGENCE DATE September 14, 1980 HOUR 8:30 - 9:30 a.m. MDT
SURFACE SOIL MOISTURE dry SUBSOIL MOISTURE dry IN
CROP STAGE/HEIGHT grass green/6-8 in. CROP CONDITION moderate
WEEDS STAGE/HEIGHT mature/14-16 in.

WEATHER AIR TEMP. 64 F RELATIVE HUMIDITY 50 % WIND E MPH 1-3
SKY clear SOIL TEMP.: SURFACE 62 F 1" 64 F 2" 60 F 4" 60 F

SOIL TEXTURE sandy loam SAND 72.4% SILT 15.2% CLAY 12.4% O.M. 1.3 % pH 7.6

CROP PLANTING DATE ____ VARIETY ____ ROW WIDTH ____ IN
SEED DEPTH ____ IN SOIL MOISTURE FOR SEED ____ TILTH/CLOD SIZE ____ IN
SEEDBED PREPARATION ____ STUBBLE OR TRASH ____
POST-PLANTING TILLAGE ____
IRRIGATION ____
PREVIOUS CROP grass hay PREVIOUS PESTICIDES none

EVALUATIONS DATE/DATA Sept. 14, 1981: shoot counts

HARVEST DATE/DATA ____

## FACTORS AFFECTING THE EXPERIMENT

Experimental site located on shallow soil over sandstone ridge. Very dry in 1980, only 0.80 inch of precipitation from June 20 to September 14. Heavy dew at time of fall application.

## CROP RESPONSE

Little apparent grass cover noted May, 1980, when plots were established. By September, 1981, grass. was 20 to 24 inches, high and still green in treatment areas.

## WEED CONTROL

Banvel 4L was more effective as a spring application than a fall application. Banvel 5G was only slightly more effective as a spring treatment than a fall treatment. Tordon 22K applied in the spring provided similar control to fall application. Tordon 2K was slightly better as a fall treatment than a spring treatment. Banvel at 6.0 and 8.0 lb/A provided good control; Tordon at 1.0 and 2.0 lb/A provided good to excellent control. See Table 49.

**Table 48. Evaluation of original treatment effect on leafy spurge live shoot regrowth. Driskill Ranch, Crook County. 1981.**

| Treatment[1] | Rate lb ai/A | Percent Control[2] |
|---|---|---|
| Banvel 4L | 6.0 | 74 |
| Banvel 4L | 8.0 | 94 |
| | | |
| Banvel 5G | 6.0 | 80 |
| Banvel 5G | 8.0 | 99 |
| | | |
| Tordon 22K | 1.0 | 99 |
| Tordon 22K | 2.0 | 100 |
| | | |
| Tordon 2K | 1.0 | 99 |
| Tordon 2K | 2.0 | 100 |
| | | |
| Check | -- | 20 shoots/sq ft |

[1]Treatments made May 15, 1980.
[2]Evaluated May 19, 1981.

**Table 49. Evaluation of spring vs. fall applied original treatments as affecting leafy spurge live shoot regrowth. Hallam Ranch. Fremont County. 1981.**

| | Rate | Percent Control[2] | |
|---|---|---|---|
| Treatment [1] | lb ai/A | Spring | Fall |
| Banvel 4L | 6.0 | 92 | 70 |
| Banvel 4L | 8.0 | 95 | 83 |
| | | | |
| Banvel 5G | 6.0 | 92 | 89 |
| Banvel 5G | 8.0 | 95 | 93 |
| | | | |
| Tordon 22K | 1.0 | 96 | 95 |
| Tordon 22K | 2.0 | 99 | 99 |
| | | | |
| Tordon 2K | 1.0 | 93 | 99 |
| Tordon 2K | 2.0 | 95 | 99 |
| | | | |
| Check | -- | 19.8 shoots/sq ft | 19.4 shoots/sq ft |

[1]Spring treatments made May 23, 1980; fall treatments made September 14, 1980.
[2]Evaluated May 27, 1981.

UNIVERSITY OF WYOMING
WEED SCIENCE

CROP OR WEED Leafy spurge (Euphorbia esula L.)
EXPERIMENT Live shoot regrowth evaluations
LOCATION Copps ranch - Johnson County

APPLICATION METHOD hand VOL/A _____ GAL [X] FULL COVERAGE
PLOT SIZE 80 x 100 ft REPLICATIONS 1 [ ] BAND _____ INCHES
DESIGN block
EQUIPMENT fertilizer spreader NOZZLE _____ PSI _____
PREPLANT DATE _____ HOUR _____
SURFACE SOIL MOISTURE _____ IN SUBSOIL MOISTURE _____ IN
SURFACE SOIL CONDITION - CLODS _____ SURFACE PLANT MATERIAL _____
POSTEMERGENCE DATE May 29, 1980 HOUR 1:00 - 3:00 p.m. MDT
SURFACE SOIL MOISTURE damp IN SUBSOIL MOISTURE intermediate IN
CROP STAGE/HEIGHT _____ CROP CONDITION _____
WEEDS STAGE/HEIGHT pre-bud to full flower/4-24 in.

INCORPORATION DATE _____ IMPLEMENT _____
HOURS AFTER HERBICIDE APPLICATION _____ DEPTH _____ IN
WEATHER AIR TEMP. 57 F RELATIVE HUMIDITY 100 % WIND N MPH 0-4
SKY cloudy SOIL TEMP.: SURFACE 64 F 1" 63 F 2" 63 F 4" 61 F
SOIL TEXTURE silty loam SAND 31.4% SILT 62.2% CLAY 6.4 % O.M. 2.8 % PH 7.6
PREVIOUS CROP rangeland PREVIOUS PESTICIDES none
EVALUATIONS DATE/DATA June 2, 1981: shoot counts
HARVEST DATE/DATA _____
FACTORS AFFECTING THE EXPERIMENT

Light rain during application. 4.80 inches precipitation from time of application to September 20, 1980. Experimental site located in basin of a draw on deep soil.

CROP RESPONSE

No grass damage observed.

WEED CONTROL

Banvel 5G provided moderate control at 70 to 76%.Tordon 2K at 1.0 and 2.0 lb ai/A provided excellent control at 99%.

**Table 50. Evaluation of original treatment effect on leafy spurge live shoot regrowth. Copps Ranch. Johnson County. 1981.**

| Treatment[1] | Rate lb ai/A | Percent Control[2] |
|---|---|---|
| Banvel 5G | 6.0 | 76 |
| Banvel 5G | 8.0 | 70 |
| Tordon 2K | 1.0 | 99 |
| Tordon 2K | 2.0 | 99 |
| Check | | 10.9 shoots/sq ft |

[1]Treatments made May 29, 1980.
[2]Evaluated June 2, 1981.

UNIVERSITY OF WYOMING
WEED SCIENCE

CROP OR WEED Leafy spurge (Euphorbia esula L.)
EXPERIMENT Live shoot regrowth evaluations
LOCATION Driskill ranch - Crook County

APPLICATION METHOD mechanical VOL/A 40 GAL [X] FULL COVERAGE
PLOT SIZE 11 x 22 ft REPLICATIONS 2 [ ] BAND ____ INCHES
DESIGN split block
EQUIPMENT truck mounted sprayer; 13-nozzle boom NOZZLE TeeJet HSS 8004 PSI 40
PREPLANT DATE ____ HOUR ____
SURFACE SOIL MOISTURE ____ IN SUBSOIL MOISTURE ____ IN
SURFACE SOIL CONDITION - CLODS ____ SURFACE PLANT MATERIAL ____
POSTEMERGENCE DATE May 13, 1980 HOUR ____
SURFACE SOIL MOISTURE dry IN SUBSOIL MOISTURE intermediate IN
CROP STAGE/HEIGHT green grass, 6-8 in. CROP CONDITION good
WEEDS STAGE/HEIGHT bud to full flower/8-12 in.

INCORPORATION DATE ____ IMPLEMENT ____
HOURS AFTER HERBICIDE APPLICATION ____ DEPTH ____ IN
WEATHER AIR TEMP. ____ F RELATIVE HUMIDITY ____ % WIND 0 MPH ____
SKY partly cloudy SOIL TEMP.: SURFACE ____ F 1" ____ F 2" ____ F 4" ____ F
SOIL TEXTURE sandy loam SAND 65.4% SILT 23.2% CLAY 11.4% O.M. 1.5% pH 7.7
CROP PLANTING DATE ____ VARIETY ____ ROW WIDTH ____ IN
SEED DEPTH ____ IN SOIL MOISTURE FOR SEED ____ TILTH/CLOD SIZE ____ IN
SEEDBED PREPARATION ____ STUBBLE OR TRASH ____
POST-PLANTING TILLAGE ____
IRRIGATION ____
PREVIOUS CROP rangeland PREVIOUS PESTICIDES none
EVALUATIONS DATE/DATA May 20, 1981: shoot counts
HARVEST DATE/DATA ____
FACTORS AFFECTING THE EXPERIMENT

Original treatments made May 25, 1978; retreated June 21, 1979 and May 13, 1980. Leafy spurge in bud to flower stage, actively growing.

## CROP RESPONSE

No damage to grass observed.

## WEED CONTROL

Percent control is based on reduction of live shoots per square foot as compared to the check. Leafy spurge regrew in all original treatment areas, three years after first treated. Control is 83% to 90% from 2.0 lb/A of Tordon. Tordon 22K at 1.0 lb/A and Banvel 4L at 8.0 lb/A maintained 84% and 77% control, respectively. Retreatments improved top growth control for all original treatments. Two retreatments of Tordon 22K at 0.5 and 1.0 lb/A achieved 96% to 100% control. Control from other retreatments varies depending on regrowth allowed by original treatments.

**Table 51. Effect of original treatments, retreatments and combinations as evaluated by live shoot regrowth of le afy spurge. Driskill Ranch. Crook County. 1981 .**

| | Percent Shoot Control[1] | | | | | |
|---|---|---|---|---|---|---|
| | Retreatment lb ai/A | | | | | |
| Original[1] lb ai/A | 2,4-D amine 2.0 | Tordon 22K 0.5 | Banvel 4L 2.0 | Check | Tordon 22K 1.0 | Banvel 4L 1.0 2,4-D amine 2.0 |
| Tordon 22K 2.0 | 93 | 100 | 96 | 90 | 100 | 95 |
| Tordon 22K 1.0 | 84 | 99 | 90 | 84 | 100 | 89 |
| Tordon 22K 0.5 | 80 | 99 | 79 | 29 | 100 | 77 |
| Tordon 2K 2.0 | 90 | 99 | 98 | 83 | 100 | 87 |
| Tordon 2K 1.0 | 92 | 99 | 82 | 68 | 99 | 82 |
| Tordon 2K 0.5 | 76 | 100 | 77 | 36 | 100 | 78 |
| Tordon 212[2] 2.0 + 4.0 | 90 | 99 | 95 | 87 | 100 | 89 |
| Tordon 212 1.0 + 2.0 | 76 | 98 | 89 | 31 | 100 | 64 |
| Tordon 212 0.5 + 1.0 | 66 | 96 | 65 | 0 | 100 | 73 |
| Banvel 4L 8.0 | 82 | 96 | 87 | 77 | 98 | 94 |
| Banvel 4L 4.0 | 69 | 97 | 84 | 24 | 100 | 83 |
| Check | 58 | 99 | 85 | 20 shoots/ sq ft | 100 | 63 |

[1]Original treatments May 25, 1978; retreatment June 21, 1979, and May 13, 1980; evaluated May 20, 1981.
[2]Tordon 212 (Dow's mixture of 1.0 lb picolinic acid + 2.0 lb 2,4-D/gal).

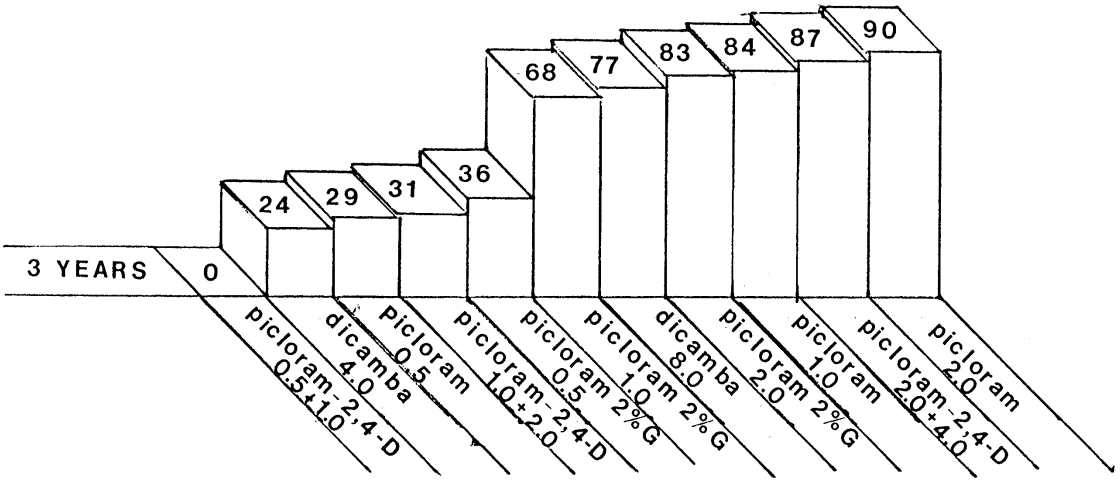


**ORIGINAL TREATMENTS--1978**

**Figure 1. Percentage leafy spurge shoot control thru years following original treatments.**

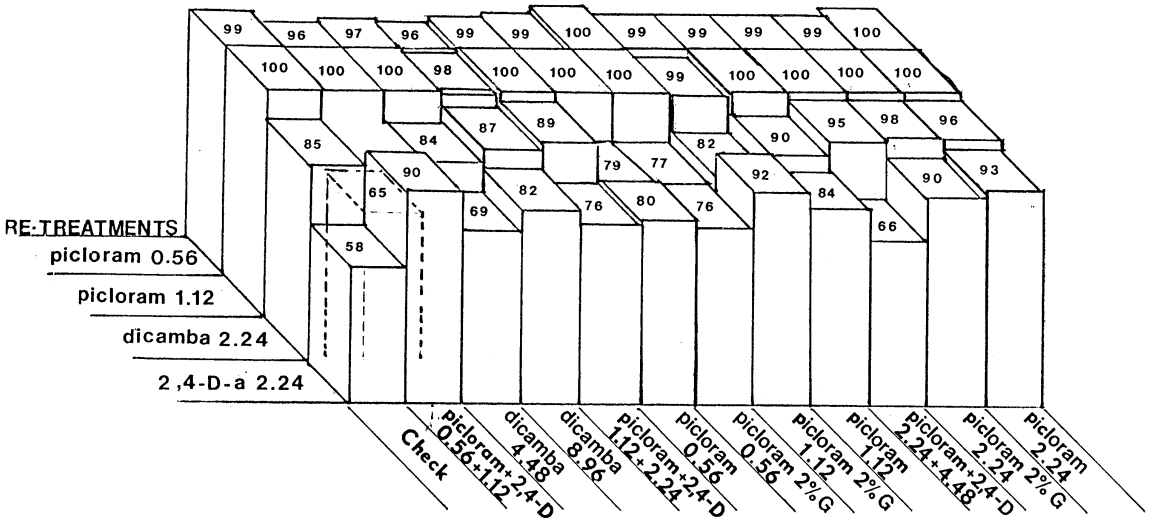


**ORIGINAL TREATMENTS -- 1978**

**Figure 2. Percentage leafy spurge shoot control resulting from original plus two retreatments with picloram at 0.56 and 1.12 kg/ha, dicamba at 2.25 kg/ha and 2,4-D amine at 2.24 kg/ha.**

UNIVERSITY OF WYOMING
WEED SCIENCE

CROP OR WEED Leafy Spurge (Euphorbia esula L.)
EXPERIMENT Shoot and root control evaluations
LOCATION Driskill ranch - Crook County

APPLICATION METHOD mechanical VOL/A 40 GAL [X] FULL COVERAGE
PLOT SIZE 11 x 22 ft REPLICATIONS ____ [ ] BAND ____ INCHES
DESIGN split block
EQUIPMENT truck mounted sprayer - 13 nozzle boom NOZZLE TeeJet HSS 8004 PSI 40
PREPLANT DATE ____ HOUR ____
SURFACE SOIL MOISTURE ____ IN SUBSOIL MOISTURE ____ IN
SURFACE SOIL CONDITION - CLODS ____ SURFACE PLANT MATERIAL ____
POSTEMERGENCE DATE May 13, 1980 HOUR ____
SURFACE SOIL MOISTURE dry IN SUBSOIL MOISTURE intermediate IN
CROP STAGE/HEIGHT green grass: 6-8 in. CROP CONDITION good
WEEDS STAGE/HEIGHT bud to full flower: 8-12 in.

INCORPORATION DATE ____ IMPLEMENT ____
HOURS AFTER HERBICIDE APPLICATION ____ DEPTH ____ IN
WEATHER AIR TEMP. ____ F RELATIVE HUMIDITY ____ % WIND ____ MPH ____
SKY partly cloudy SOIL TEMP.: SURFACE ____ F 1" ____ F 2" ____ F 4" ____ F
SOIL TEXTURE sandy loam SAND 65.4% SILT 23.2% CLAY 11.4% O.M. 1.5% pH 7.7
CROP PLANTING DATE ____ VARIETY ____ ROW WIDTH ____ IN
SEED DEPTH ____ IN SOIL MOISTURE FOR SEED ____ TILTH/CLOD SIZE ____ IN
SEEDBED PREPARATION ____ STUBBLE OR TRASH ____
POST-PLANTING TILLAGE ____
IRRIGATION ____
PREVIOUS CROP rangeland PREVIOUS PESTICIDES none
EVALUATIONS DATE/DATA May 20, 1981: shoot counts; July 22, 1981: root samples
HARVEST DATE/DATA ____
FACTORS AFFECTING THE EXPERIMENT

Original treatments made May 25, 1978; retreated June 21, 1979. Leafy spurge in bud to flower stage, actively growing.

## CROP RESPONSE

No damage to grass observed.

## WEED CONTROL

Dry root weight was highest in the top 8 inches of soil and decreased with depth. All treatments reduced the root system in all soil depth levels. The combination of Tordon 2K at 2.0 lb/A and Tordon 22K at 1.0 lb/A was most effective in reducing the root weight. The original Banvel at 8.0 lb/A treatment and the retreatment of Banvel at 2.0 lb/A were more effective than the Banvel at 8.0 lb/A plus 2.0 lb/A combination. Retreatment of Tordon at 1.0 lb/A, without prior original treatment, was more effective than the original Tordon at 1.0 lb/A treatment, although each area received the same rate of application.

**Table 52. Effect of original treatments, retreatments and combinations on leafy spurge live shoot regrowth and root weight. Driskill Ranch. Crook County. 1981.**

| Original[1] | lb ai/A | % Control[2] | | Root Dry Wt. (g/0.12 cu. ft.) Soil Depth (inches) | | | |
|---|---|---|---|---|---|---|---|
| Retreatment[1] | | Shoot | Root | 0-8 | 8-16 | 16-24 | TOTAL |
| Tordon 2K | 2.0 | | | | | | |
| Tordon 22K | 1.0 | 100 | 60 | 5.370 | 2.415 | 1.12-51 | 9 .036 |
| Banvel 4L | 8.0 | | | | | | |
| None | -- | 77 | 55 | 6.588 | 2.369 | 1.374 | 10.331 |
| None | | | | | | | |
| Tordon 22K | 1.0 | 100 | 53 | 6.572 | 2.234 | 1.956 | 10.762 |
| Tordon 2K | 2.0 | | | | | | |
| None | -- | 83 | 51 | 6.946 | 2.468 | 1.701 | 11.115 |
| None | -- | | | | | | |
| Banvel 4L | 2.0 | 85 | 49 | 7.233 | 2.461 | 1.392 | 11.599 |
| Banvel 4L | 8.0 | | | | | | |
| Banvel 4L | 2.0 | 87 | 47 | 7.728 | 2.683 | 1.688 | 12.099 |
| None | -- | | | | | | |
| Tordon 22K | 0.5 | 99 | 42 | 8.405 | 2.922 | 1.425 | 13.222 |
| Tordon 2K | 1.0 | | | | | | |
| None | -- | 68 | 36 | 9.567 | 2.777 | 1.908 | 14.673 |
| None | | | | | | | |
| None | | 0 | 0 | 14.630 | 4.823 | 3.369 | 22.822 |

[1]Original treatments made May 25, 1978; retreated June 21, 1979 and May 13, 1980.
[2]Shoot counts May 20, 1981; root samples July 22, 1981.

UNIVERSITY OF WYOMING
WEED SCIENCE

CROP OR WEED Leafy spurge (Euphorbia esula L.)
EXPERIMENT Forage production measurements
LOCATION Driskill ranch - Crook County

APPLICATION METHOD mechanical, hand VOL/A 128 GAL [X] FULL COVERAGE
PLOT SIZE 11 x 22 ft REPLICATIONS 2 [ ] BAND ____ INCHES
DESIGN split block
EQUIPMENT J. D. Tractor sprayer, fert. spreader NOZZLE TeeJet HSS 8004 PSI 40
PREPLANT DATE ____ HOUR ____
SURFACE SOIL MOISTURE ____ IN SUBSOIL MOISTURE ____ IN
SURFACE SOIL CONDITION - CLODS ____ SURFACE PLANT MATERIAL ____
POSTEMERGENCE DATE May 25, 1978 HOUR ____
SURFACE SOIL MOISTURE intermediate IN SUBSOIL MOISTURE intermediate IN
CROP STAGE/HEIGHT green grass CROP CONDITION ____
WEEDS STAGE/HEIGHT bud to full flower

INCORPORATION DATE ____ IMPLEMENT ____
HOURS AFTER HERBICIDE APPLICATION ____ DEPTH ____ IN
WEATHER AIR TEMP. ____ F RELATIVE HUMIDITY ____ % WIND ____ MPH ____
SKY ____ SOIL TEMP.: SURFACE ____ F 1" ____ F 2" ____ F 4" ____ F
SOIL TEXTURE sandy loam SAND 65.4 % SILT 23.2 % CLAY 11.4 % O.M. 1.5 % pH 7.7
CROP PLANTING DATE ____ VARIETY ____ ROW WIDTH ____ IN
SEED DEPTH ____ IN SOIL MOISTURE FOR SEED ____ TILTH/CLOD SIZE ____ IN
SEEDBED PREPARATION ____ STUBBLE OR TRASH ____
POST-PLANTING TILLAGE ____
IRRIGATION ____
PREVIOUS CROP rangeland PREVIOUS PESTICIDES none
EVALUATIONS DATE/DATA June 30, 1979, July 29, 1980 and July 24, 1981: clipped
HARVEST DATE/DATA ____
FACTORS AFFECTING THE EXPERIMENT

Moisture conditions limiting in 1979, favorable in 1980 and 1981.

CROP RESPONSE

Total forage production is greater in treatment areas as compared to the untreated check. High rates of Tordon and Banvel suppressed production for two years after treatment. Prostrate growth was noted in these areas during this time Average production is highest in these areas, three years after treatment. Measurements indicate a decrease in forage production as leafy spurge regrowth increases. See Table 53.

UNIVERSITY OF WYOMING
WEED SCIENCE

CROP OR WEED Leafy spurge (Euphorbia esula L.)
EXPERIMENT Measurement of forage produced and grazed
LOCATION Copps ranch - Johnson County

APPLICATION METHOD hand VOL/A _____ GAL [XX] FULL COVERAGE
PLOT SIZE 80 x 100 ft REPLICATIONS 1 [ ] BAND _____ INCHES
DESIGN block
EQUIPMENT fertilizer spreader NOZZLE _____ PSI _____
PREPLANT DATE _____ HOUR _____
SURFACE SOIL MOISTURE _____ IN SUBSOIL MOISTURE _____ IN
SURFACE SOIL CONDITION - CLODS _____ SURFACE PLANT MATERIAL _____
POSTEMERGENCE DATE May 29, 1980 HOUR 1:00 - 3:00 p.m. MDT
SURFACE SOIL MOISTURE damp IN SUBSOIL MOISTURE intermediate IN
CROP STAGE/HEIGHT _____ CROP CONDITION _____
WEEDS STAGE/HEIGHT pre-bud to full flower/4-24 in.

INCORPORATION DATE _____ IMPLEMENT _____
HOURS AFTER HERBICIDE APPLICATION _____ DEPTH _____ IN
WEATHER AIR TEMP. 57 F RELATIVE HUMIDITY 100 % WIND N MPH 0-4
SKY cloudy SOIL TEMP.: SURFACE 64 F 1" 63 F 2" 63 F 4" 61 F
SOIL TEXTURE silty loam SAND 31.4% SILT 62.2% CLAY 6.4 % O.M. 2.8% pH 7.6
CROP PLANTING DATE _____ VARIETY _____ ROW WIDTH _____ IN
SEED DEPTH _____ IN SOIL MOISTURE FOR SEED _____ TILTH/CLOD SIZE _____ IN
SEEDBED PREPARATION _____ STUBBLE OR TRASH _____
POST-PLANTING TILLAGE _____
IRRIGATION _____
PREVIOUS CROP rangeland PREVIOUS PESTICIDES none
EVALUATIONS DATE/DATA _____
HARVEST DATE/DATA May 21, 1981: clipped
FACTORS AFFECTING THE EXPERIMENT

Light rain during application. 4.80 inches precipitation from time of application to September 30, 1980. Experimental site located in basin of a draw on deep soil.

CROP RESPONSE

Areas treated with Banvel at 6.0 lb/A and Tordon at 1.0 lb/A had an increase in forage production of 550 and 903 pounds/A, respectively. Banvel at 8.0 lb/A and Tordon at 2.0 lb/A reduced forage production by 143 and 660 pounds, respectively. Livestock grazed 413 pounds/A more forage from the area treated with 6.0 lb/A Banvel than the 8.0 lb/A treated area. 1,455 pounds/A more forage was grazed from the Tordon at 1.0 lb/A area than the 2.0 lb/A area. There were similar amounts of forage left ungrazed in all areas. See Table 54.

**Table 53. Forage production measured from plots treated with Tordon 22K, Tordon 2K, Tordon 212 and Banvel 4L as compared to the untreated check. Driskill Ranch. Crook County. 1981.**

| Treatments[1] | Rate lb ai/A | Air Dry Forage (Pounds/A)[2] 1979 | 1980 | 1981 | Average |
|---|---|---|---|---|---|
| Tordon 22K | 2.0 | 1,098 | 1,010 | 1,832 | 1,313 |
| Tordon 2K | 2.0 | 992 | 601 | 2,278 | 1,290 |
| Tordon 212[3] | 2.0 + 4.0 | 1,054 | 520 | 1,776 | 1,117 |
| Tordon 2K | 1.0 | 981 | 786 | 1,552 | 1,106 |
| Tordon 212 | 1.0 + 2.0 | 1,240 | 1,160 | 850 | 1,083 |
| Tordon 22K | 0.5 | 11111 | 947 | 818 | 959 |
| Tordon 22K | 1.0 | 896 | 558 | 1,337 | 930 |
| Banvel 4L | 4.0 | 1,137 | 665 | 708 | 837 |
| Banvel 4L | 8.0 | 917 | 471 | 862 | 750 |
| Tordon 2K | 0.5 | 1,005 | 621 | 620 | 749 |
| Tordon 212 | 0.5 + 1.0 | 930 | 616 | 676 | 741 |
| Check | --- | 535 | 416 | 402 | 451 |

[1]Treatments made May 25, 1978.
[2]Harvested July 30, 1979, July 29, 1980 and July 24, 1981.
[3]Tordon 212 (Dow's mixture of 1.0 lb picolinic acid + 2.0 lb 2,4-D/gal).

**Table 54. Measurements of forage produced and grazed in a leafy spurge infestation and adjacent treatment areas. Copps Ranch. Johnson County. 1981.**

| Treatment[1] | Rate lb ai/A | Air Dry Grazed | Forage Remaining | (Pounds/A)[2] Total Production |
|---|---|---|---|---|
| Banvel 5G | 6.0 | 1,312 | 1,082 | 2,394 |
| Banvel 5G | 8.0 | 899 | 802 | 1,701 |
| Tordon 2K | 1.0 | 1,886 | 861 | 2,747 |
| Tordon 2K | 2.0 | 431 | 753 | 1,184 |
| Check | | 874 | 970 | 1,844 |

[1]Treatments made May 29, 1980.
[2]Harvested May 21, 1981.

UNIVERSITY OF WYOMING
WEED SCIENCE

CROP OR WEED Leafy spurge (Euphorbia esula L.)
EXPERIMENT Measurement of forage produced and grazed
LOCATION Driskill ranch - Crook County

APPLICATION METHOD aerial VOL/A _____ GAL [X] FULL COVERAGE
PLOT SIZE 11.5 sq ft REPLICATIONS 5 [ ] BAND _____ INCHES
DESIGN complete random
EQUIPMENT Pawnee airplane NOZZLE _____ PSI _____
PREPLANT DATE _____ HOUR _____
SURFACE SOIL MOISTURE _____ IN SUBSOIL MOISTURE _____ IN
SURFACE SOIL CONDITION - CLODS _____ SURFACE PLANT MATERIAL _____
POSTEMERGENCE DATE September 1979 HOUR _____
SURFACE SOIL MOISTURE _____ IN SUBSOIL MOISTURE _____ IN
CROP STAGE/HEIGHT _____ CROP CONDITION _____
WEEDS STAGE/HEIGHT _____

INCORPORATION DATE _____ IMPLEMENT _____
HOURS AFTER HERBICIDE APPLICATION _____ DEPTH _____ IN
WEATHER AIR TEMP. _____ F RELATIVE HUMIDITY _____ % WIND _____ MPH _____
SKY _____ SOIL TEMP.: SURFACE _____ F 1" _____ F 2" _____ F 4" _____ F
SOIL TEXTURE _____ SAND _____ % SILT _____ % CLAY _____ % O.M. _____ % pH _____
PREVIOUS CROP rangeland PREVIOUS PESTICIDES none
EVALUATIONS DATE/DATA _____
HARVEST DATE/DATA June 3, 1981: clipped
FACTORS AFFECTING THE EXPERIMENT

Moisture conditions were favorable in 1980 and 1981. Five range exclosures were put in each area. Forage was clipped inside and adjacent to each exclosure.

CROP RESPONSE

The area treated with Tordon 2K yielded 246 pounds more forage per acre than the area infested with leafy spurge. Cattle grazed 438 pounds of forage per acre in the treated area as compared to 173 pounds in the infested area. Essentially the same amount of forage was left ungrazed in this area.

**Table 55. Measurements of forage produced and grazed in a leafy spurge infestation and adjacent treatment area. Driskill Ranch. Crook County. 1981.**

| | | Air Dry Forage (Pounds/A)2 | | |
|---|---|---|---|---|
| Treatment[1] | Rate lb ai/A | Grazed | Remaining | Total Production |
| Tordon 2K | 2.0 | 438 | 220 | 658 |
| Check | -- | 173 | 239 | 412 |

[1]Treatment made September 1979.
[2]Harvested June 3, 1981.

*Reprinted with permission from: GPC-14 Annual Report: Leafy Spurge Control in the Great Plains. 1981. pp. 55-64.*

*Published by: Great Plains Agricultural Council.*

# Soil persistence - picloram and dicamba

R. E. VORE and H. P. ALLEY

The depth in the soil profile of weed root kill, subsequent emergence of the roots in treated areas, concentration of picloram and dicamba at various soil depths, and the concentration essential for activity are all factors important to initial as well as repetitive herbicide treatments.

Four research plots were established in May of 1980 in Fremont, Sheridan, Johnson and Crook counties to measure the soil persistence and concentration of picloram and dicamba under different soil types and precipitation patterns. Soil samples were obtained from 8, 16 and 24 inch soil depths approximately 4, 8 and 16 weeks following application.

Under all soil types and precipitation patterns, the concentration of dicamba and picloram was highest in the top 8 inches of soil. The highest concentration of picloram from a 2 1b ai/A application, was under the highest rainfall recorded and the highest organic matter level. From the data accumulated it appears that organic matter is the most important factor in picloram persistence.

Dicamba persistence did not follow the same pattern. The highest concentration of dicamba was measured in the soil with the lowest organic matter and lowest precipitation.

Two years after application, regardless of rate, picloram concentration in 24 inches of soil was very low. Only 0.097 ppm of picloram was measured in the top 8 inches of soil, two years following application.

Analyses of soil for dicamba and picloram was performed by the Wyoming Department of Agriculture, Division of Laboratories.

UNIVERSITY OF WYOMING
WEED SCIENCE

CROP OR WEED Herbicide Residual
EXPERIMENT Persistence of picloram and dicamba
LOCATION Hallam Ranch - Fremont County

APPLICATION METHOD Hand VOL/A ____ GAL [XX] FULL COVERAGE
PLOT SIZE 21.5 x 258 ft REPLICATIONS 2 [ ] BAND ____ INCHES
DESIGN Complete random
EQUIPMENT Fert. spreader NOZZLE ____ PSI ____
PREPLANT DATE ____ HOUR ____
SURFACE SOIL MOISTURE ____ IN SUBSOIL MOISTURE ____ IN
SURFACE SOIL CONDITION - CLODS ____ SURFACE PLANT MATERIAL ____
POSTEMERGENCE DATE May 23, 1980 HOUR 5:00 to 6:30 p.m.
SURFACE SOIL MOISTURE Dry IN SUBSOIL MOISTURE wet IN
CROP STAGE/HEIGHT ____ CROP CONDITION ____
WEEDS STAGE/HEIGHT ____

INCORPORATION DATE ____ IMPLEMENT ____
HOURS AFTER HERBICIDE APPLICATION ____ DEPTH ____ IN
WEATHER AIR TEMP. 63 F RELATIVE HUMIDITY 79 % WIND NW MPH 4-6
SKY partly cloudy SOIL TEMP.: SURFACE 62 F 1" 63 F 2" 64 F 4" 65 F
SOIL TEXTURE ____ SAND ____ % SILT ____ % CLAY ____ % O.M. ____ % pH ____
CROP PLANTING DATE ____ VARIETY ____ ROW WIDTH ____ IN
SEED DEPTH ____ IN SOIL MOISTURE FOR SEED ____ TILTH/CLOD SIZE ____ IN
SEEDBED PREPARATION ____ STUBBLE OR TRASH ____
POST-PLANTING TILLAGE ____
IRRIGATION ____
PREVIOUS CROP grass forage PREVIOUS PESTICIDES none
EVALUATIONS DATE/DATA 28, 54, 114 days after treatment: core sampled
HARVEST DATE/DATA ____
FACTORS AFFECTING THE EXPERIMENT

Total precipitation 0.82 inch from 5/23 to 9/14 (6/20-0.15"; 7/15-0.40"; 8/11-0.57"; 9/14-0.82"). Plots located on shallow soil above sandstone layer.

RESULTS

Concentration of picloram and dicamba was greatest in the top 8 inches of soil and decreased as soil depth increased.

**Table 56. Picolinic acid and dicamba concentration at three soil depths. Hallam Ranch. Fremont County. 1980.**

| Treatment[1] | Rate ai/A | Days After Treatment | Sample Depth (inches) 0-8 | 8-16 | 16-24 |
|---|---|---|---|---|---|
| | | | (ppm) | | |
| picloram | 1.0 | 28 | 0.201 | 0.049 | 0.005 |
| | | 54 | 0.173 | 0.036 | 0.006 |
| | | 114 | 0.146 | 0.015 | 0.044 |
| picloram | 2.0 | 28 | 0.106 | 0.024 | 0.004 |
| | | 54 | 0.490 | 0.051 | 0.021 |
| | | 114 | 0.167 | 0.012 | 0.007 |
| dicamba | 6.0 | 28 | 1.020 | 0.057 | 0.032 |
| | | 54 | 2.080 | 0.046 | 0.003 |
| | | 114 | 2.610 | 0.047 | 0.009 |
| dicamba | 8.0. | 28 | 1.720 | 0.306 | 0.028 |
| | | 54 | 2.500 | 0.434 | 0.016 |
| | | 114 | 2.620 | 0.118 | 0.053 |
| | Soil Texture | | SL[2] | SL | L |
| | Sand (%) | | 55.2 | 55.2 | 47.2 |
| | Silt (%) | | 30.6 | 31.6 | 39.6 |
| | Clay (%) | | 14.2 | 13.2 | 13.2 |
| | Organic Matter (%) | | 2.2 | 1.1 | 0.0 |
| | pH (paste) | | 7.3 | 7.5 | 7.7 |

[1]Treatments made May 23, 1980.
[2]SL = sandy loam; L = loam.

UNIVERSITY OF WYOMING
WEED SCIENCE

CROP OR WEED Herbicide Residual
EXPERIMENT Persistence of picloram and dicamba
LOCATION Richardson Ranch - Sheridan County

APPLICATION METHOD Hand VOL/A ____ GAL [XX] FULL COVERAGE [ ] BAND ____ INCHES
PLOT SIZE 21.5 x 258 ft REPLICATIONS 1
DESIGN Complete random
EQUIPMENT Fert. spreader NOZZLE ____ PSI ____
PREPLANT DATE ____ HOUR ____
SURFACE SOIL MOISTURE ____ IN SUBSOIL MOISTURE ____ IN
SURFACE SOIL CONDITION - CLODS ____ SURFACE PLANT MATERIAL ____
POSTEMERGENCE DATE May 28, 1980 HOUR 10:00 a.m. to 1:00 p.m.
SURFACE SOIL MOISTURE Dry IN SUBSOIL MOISTURE intermediate IN
CROP STAGE/HEIGHT ____ CROP CONDITION ____
WEEDS STAGE/HEIGHT ____

INCORPORATION DATE ____ IMPLEMENT ____
HOURS AFTER HERBICIDE APPLICATION ____ DEPTH ____ IN
WEATHER AIR TEMP. 70 F RELATIVE HUMIDITY 48 % WIND NE MPH 0-2
SKY partly cloudy SOIL TEMP.: SURFACE 84 F 1" 80 F 2" 83 F 4" 73 F
SOIL TEXTURE ____ SAND ____ % SILT ____ % CLAY ____ % O.M. ____ % pH ____
CROP PLANTING DATE ____ VARIETY ____ ROW WIDTH ____ IN
SEED DEPTH ____ IN SOIL MOISTURE FOR SEED ____ TILTH/CLOD SIZE ____ IN
SEEDBED PREPARATION ____ STUBBLE OR TRASH ____
POST-PLANTING TILLAGE ____
IRRIGATION ____
PREVIOUS CROP grass forage PREVIOUS PESTICIDES none
EVALUATIONS DATE/DATA 26, 54, 117 days after treatment: core sampled
HARVEST DATE/DATA ____

FACTORS AFFECTING THE EXPERIMENT

Total precipitation 1.91 inches from 5/28 to 7/21 (5/30-0.91"; 6/23-1.85; 7/21-1.91"). Plots located on rocky soil area.

RESULTS

Concentration of picloram and dicamba was greatest in the top 8 inches of soil; decreased as depth increased.

**Table 57. Picolinic acid and dicamba concentration at three soil depths. Richardson Ranch. Sheridan County. 1980.**

| | | | Sample | Depth (inches) | |
|---|---|---|---|---|---|
| | | Days After | 0-8 | 8-16 | 16-24 |
| Treatment[1] | Rate lb ai/A | Treatment | | (ppm) | |
| picloram | 1.0 | 26 | 0.357 | 0.081 | 0.383 |
| | | 54 | 0.341 | 0.063 | 0.080 |
| | | 117 | 0.991 | 0.048 | T2 |
| picloram | 2.0 | 26 | 0.924 | 0.026 | 0.029 |
| | | 54 | 0.173 | 0.029 | 0.062 |
| | | 117 | 0.481 | 0.015 | T |
| dicamba | 6.0 | 26 | 0.867 | 0.120 | 0.020 |
| | | 54 | 0.550 | 0.017 | 0.014 |
| | | 117 | 0.380 | 0.046 | 0.013 |
| dicamba | 8.0 | 26 | 2.580 | 0.047 | 0.051 |
| | | 54 | 3.850 | 0.027 | 0.011 |
| | | 117 | 0.299 | 0.015 | 0.005 |
| | Soil Texture | | CL[3] | CL | CL |
| | Sand (%) | | 23.2 | 23.2 | 27.2 |
| | Silt (%) | | 46.0 | 38.0 | 42.0 |
| | Clay (%) | | 30.8 | 38.8 | 30.8 |
| | Organic Matter(%) | | 2.6 | 1.7 | 1.8 |
| | pH (paste) | | 6.6 | 6.5 | 7.5 |

[1]Treatments made May 28, 1980.
[2]T = Trace: dicamba, less than 0.002 ppm; picloram, less than 0.003 ppm.
[3]CL = clay loam.

UNIVERSITY OF WYOMING
WEED SCIENCE

CROP OR WEED Herbicide Residual
EXPERIMENT Persistence of picloram and dicamba
LOCATION Copps Ranch - Johnson County

APPLICATION METHOD Hand VOL/A ____ GAL [XX] FULL COVERAGE
PLOT SIZE 80 x 100 ft REPLICATIONS 1 [ ] BAND ____ INCHES
DESIGN Block
EQUIPMENT Fert. spreader NOZZLE ____ PSI ____
PREPLANT DATE ____ HOUR ____
SURFACE SOIL MOISTURE ____ IN SUBSOIL MOISTURE ____ IN
SURFACE SOIL CONDITION - CLODS ____ SURFACE PLANT MATERIAL ____
POSTEMERGENCE DATE May 29, 1980 HOUR 1:00 to 3:00 p.m.
SURFACE SOIL MOISTURE Damp IN SUBSOIL MOISTURE intermediate IN
CROP STAGE/HEIGHT ____ CROP CONDITION ____
WEEDS STAGE/HEIGHT ____

INCORPORATION DATE ____ IMPLEMENT ____
HOURS AFTER HERBICIDE APPLICATION ____ DEPTH ____ IN
WEATHER AIR TEMP. 57 F RELATIVE HUMIDITY 100% WIND N MPH 0-4
SKY cloudy SOIL TEMP.: SURFACE 64 F 1" 63 F 2" 63 F 4" 61 F
SOIL TEXTURE ____ SAND ____% SILT ____% CLAY ____% O.M. ____% pH ____
CROP PLANTING DATE ____ VARIETY ____ ROW WIDTH ____ IN
SEED DEPTH ____ IN SOIL MOISTURE FOR SEED ____ TILTH/CLOD SIZE ____ IN
SEEDBED PREPARATION ____ STUBBLE OR TRASH ____
POST-PLANTING TILLAGE ____
IRRIGATION ____
PREVIOUS CROP ____ PREVIOUS PESTICIDES ____
EVALUATIONS DATE/DATA 26, 54, 117 days after application: core sampled
HARVEST DATE/DATA ____

FACTORS AFFECTING THE EXPERIMENT

Total precipitation 4.80 inches from 5/29 to 9/23 (6/24-1.24"; 7/22-1.42"; 8/29-2.52"; 9/23-4.80"). Light sprinkle at time of application. Plots located on deep soil in draw bottom.

RESULTS

Concentration of picloram and dicamba was greatest in the 0-8 inch soil level and decreased as soil depth increased.

**Table 58. Picolinic acid and dicamba concentration at three soil depths. Copps Ranch. Johnson County. 1980.**

| Treatment[1] | Rate lb ai/A | Days After Treatment | Sample Depth (inches) 0-8 | 8-16 | 16-24 |
|---|---|---|---|---|---|
| | | | (ppm) | | |
| Picloram | 1.0 | 26 | 0.117 | T[2] | T |
| | | 54 | 0.301 | 0.017 | 0.009 |
| | | 117 | 0.062 | 0.016 | T |
| Picloram | 2.0 | 26 | 0.541 | 0.059 | T |
| | | 54 | 1.010 | 0.148 | 0.018 |
| | | 117 | 0.547 | 0.070 | 0.017 |
| dicamba | 6.0 | 26 | 0.521 | 0.005 | T |
| | | 54 | 1.030 | 0.005 | 0.008 |
| | | 117 | 0.424 | 0.145 | 0.004 |
| dicamba. | 8.0 | 26 | 1.000 | 0.009 | 0.007 |
| | | 54 | 0.319 | T | T |
| | | 117 | 0.504 | 0.042 | 0.009 |
| | Soil Texture | | L[3] | L | L |
| | Sand (%) | | 39.2 | 37.2 | 37.2 |
| | Silt (%) | | 38.0 | 40.0 | 42.0 |
| | Clay (%) | | 22.8 | 22.8 | 20.8 |
| | Organic Matter (%) | | 2.9 | 2.6 | 1.5 |
| | PH (paste) | | 7.6 | 7.5 | 7.5 |

[1]Treatments made May 29, 1980.
[2]T = Trace: dicamba, less than 0.002 PPM; Picloram, less than 0.003 ppm.
[3]L = loam.

UNIVERSITY OF WYOMING
WEED SCIENCE

CROP OR WEED Herbicide Residual
EXPERIMENT Persistence of picloram and dicamba
LOCATION Driskill Ranch - Crook County

APPLICATION METHOD Hand VOL/A ____ GAL [XX] FULL COVERAGE
PLOT SIZE 21.5 x 258 ft REPLICATIONS 2 [ ] BAND ____ INCHES
DESIGN Complete random
EQUIPMENT Fert. spreader NOZZLE ____ PSI ____
PREPLANT DATE ____ HOUR ____
SURFACE SOIL MOISTURE ____ IN SUBSOIL MOISTURE ____ IN
SURFACE SOIL CONDITION - CLODS ____ SURFACE PLANT MATERIAL ____
POSTEMERGENCE DATE May 15, 1980 HOUR 9:00 to 11:00 a.m.
SURFACE SOIL MOISTURE Dry to 1 IN SUBSOIL MOISTURE intermediate IN
CROP STAGE/HEIGHT ____ CROP CONDITION ____
WEEDS STAGE/HEIGHT ____

INCORPORATION DATE ____ IMPLEMENT ____
HOURS AFTER HERBICIDE APPLICATION ____ DEPTH ____ IN
WEATHER AIR TEMP. 67 F RELATIVE HUMIDITY 42 % WIND N MPH 0-2
SKY partly cloudy SOIL TEMP.: SURFACE 65 F 1" 62 F 2" 55 F 4" 52 F
SOIL TEXTURE ____ SAND ____ % SILT ____ % CLAY ____ % O.M. ____ % pH ____
CROP PLANTING DATE ____ VARIETY ____ ROW WIDTH ____ IN
SEED DEPTH ____ IN SOIL MOISTURE FOR SEED ____ TILTH/CLOD SIZE ____ IN
SEEDBED PREPARATION ____ STUBBLE OR TRASH ____
POST-PLANTING TILLAGE ____
IRRIGATION ____
PREVIOUS CROP rangeland PREVIOUS PESTICIDES none
EVALUATIONS DATE/DATA 28, 57,113 days after treatment: core sampled
HARVEST DATE/DATA ____
FACTORS AFFECTING THE EXPERIMENT

Total precipitation 6.09 inches from 5/15 to 9/23 (6/12-1.45"; 7/11-2.90"; 7/31-3.48"; 9/5-5.44"; 9/23-6.09").

RESULTS

Concentration of picloram and dicamba was greatest in the top 8 inches of soil; decreased as depth increased.

**Table 59. Picolinic acid and dicamba concentration at three soil depths. Driskill Ranch. Crook County. 1980.**

| Treatment[1] | Rate lb ai/A | Days After Treatment | Sample 0-8 | Depth (inches) 8-16 | 16-24 |
|---|---|---|---|---|---|
| | | | | (ppm) | |
| picloram | 1.0 | 28 | 0.374 | 0.039 | 0.024 |
| | | 57 | 0.320 | 0.107 | 0.026 |
| | | 113 | 0.398 | 0.019 | T[2] |
| picloram | 2.0 | 28 | 0.807 | 0.122 | 0.051 |
| | | 57 | 0.608 | 0.119 | 0.055 |
| | | 113 | 0.670 | 0.059 | 0.014 |
| dicamba | 6.0 | 28 | 1.480 | 0.086 | 0.014 |
| | | 57 | 0.854 | 0.015 | 0-009 |
| | | 113 | 0.068 | 0.005 | T |
| dicamba | 8.0 | 28 | 1.500 | 0.022 | 0.084 |
| | | 57 | 1.630 | 0.126 | 0.047 |
| | | 113 | 1.340 | 0.086 | 0.033 |
| | Soil Texture | | SL[3] | SL | SL |
| | Sand (%) | | 75.2 | 79.2 | 75.2 |
| | Silt (%) | | 13.6 | 10.6 | 14.6 |
| | Clay (%) | | 11.2 | 10.2 | 10.2 |
| | Organic Matter (%) | | 3.1 | 0.8 | 0.6 |
| | pH (paste) | | 7.7 | 7.8 | 7.8 |

[1]Treatments made May 15, 1980.

[2]T = Trace: dicamba, less than 0.002 ppm; picloram, less than 0.003 ppm.

[3]SL = silty loam.

UNIVERSITY OF WYOMING
WEED SCIENCE

CROP OR WEED Herbicide Residual
EXPERIMENT Persistence of picloram
LOCATION Driskill Ranch - Crook County

APPLICATION METHOD Aerial VOL/A ____ GAL [XX] FULL COVERAGE
PLOT SIZE 60 x 1320 ft REPLICATIONS 1 [ ] BAND ____ INCHES
DESIGN ____
EQUIPMENT Weatherly airplane NOZZLE ____ PSI ____
PREPLANT DATE ____ HOUR ____
SURFACE SOIL MOISTURE ____ IN SUBSOIL MOISTURE ____ IN
SURFACE SOIL CONDITION - CLODS ____ SURFACE PLANT MATERIAL ____
POSTEMERGENCE DATE May 26, 1978 HOUR ____
SURFACE SOIL MOISTURE ____ IN SUBSOIL MOISTURE ____ IN
CROP STAGE/HEIGHT ____ CROP CONDITION ____
WEEDS STAGE/HEIGHT ____

INCORPORATION DATE ____ IMPLEMENT ____
HOURS AFTER HERBICIDE APPLICATION ____ DEPTH ____ IN
WEATHER AIR TEMP. ____ F RELATIVE HUMIDITY ____ % WIND ____ MPH ____
SKY ____ SOIL TEMP.: SURFACE ____ F 1" ____ F 2" ____ F 4" ____ F
SOIL TEXTURE loam SAND 45.2% SILT 37.6% CLAY 17.2% O.M. 2.0% pH 6.9
CROP PLANTING DATE ____ VARIETY ____ ROW WIDTH ____ IN
SEED DEPTH ____ IN SOIL MOISTURE FOR SEED ____ TILTH/CLOD SIZE ____ IN
SEEDBED PREPARATION ____ STUBBLE OR TRASH ____
POST-PLANTING TILLAGE ____
IRRIGATION ____
PREVIOUS CROP rangeland PREVIOUS PESTICIDES none
EVALUATIONS DATE/DATA May 14, 1980: core sampled
HARVEST DATE/DATA ____
FACTORS AFFECTING THE EXPERIMENT

Plots on a deep soil covered with native grass.

RESULTS

Two years after application, regardless of rate, picloram concentration in 24 inches of soil was very low.

**Table 60. Picolinic acid concentration at three soil depths, two years after application. Driskill Ranch. Crook County. 1980.***

| Treatment[1] | Rate lb ai/A | Sample 0-8 | Depth (inches)[2] 8-16 | 16-24 |
|---|---|---|---|---|
| | | | (ppm) | |
| picloram | 2.0 | 0.007 | 0.038 | T[3] |
| picloram | 3.0 | 0.097 | 0.004 | 0.010 |

[1]Treatments made May 26, 1978.
[2]Sampled May 14, 1980.
[3]T = Trace; less than 0.003 ppm.

*Reprinted with permission from: GPC-14 Annual Report: Leafy Spurge Control in the Great Plains. 1981. pp. 65-66.*

*Published by: Great Plains Agricultural Council.*

# Translocation of herbicides in leafy spurge

J. C. SUTTLE and D. R. SCHREINER

*U.S.D.A. Metabolism and Radiation Research Laboratory, Fargo, ND 58105*

We have initiated a research program designed to systematically examine the effects of environmental factors, cultural practices and plant growth regulators on herbicide translocation in leafy spurge. Our first goal was to reduce the variability associated with field-grown material. This was accomplished with the following techniques: 1) a stock of cloned plant material was derived from a single plant and was utilized in all experiments; and 2) rooted cuttings to be used for experimental analysis were obtained from the cloned stock. Utilizing this system we were able to eliminate genetic variability and were able to considerably reduce the variability associated with non-uniformity of plant size and root to shoot ratios.

Using this system we have begun to examine the translocation of herbicides such as 2,4-dichlorophenoxy acetic acid (2,4-D). The results of a typical time-course experiment examining the movement of radioactively-labeled, foliarly-applied 2,4-D are shown in Figure 1.

With time, there was a progressive loss of radioactivity from the leaves with a concomitant increase in radioactivity associated with both the stem and root material. By the end of the experiment (day 4) the aerial portions of the cuttings exhibited typical phenoxy injury symptoms yet less than 10% of the absorbed radioactivity had reached the root system.

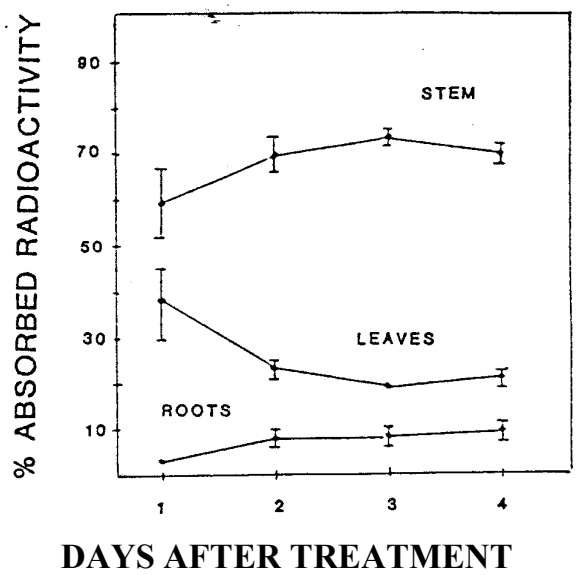

While our research program is still in its infancy, these results demonstrate the potential usefulness of our system in evaluating various factors which can be used to enhance basipetal translocation of herbicides. Research will continue in an effort to provide field-oriented investigators rational approaches to improved leafy spurge control with conventional herbicides.

*Reprinted with permission from: 1981 GPC-14 Annual Report: Leafy Spurge Control in the Great Plains. pp. 66-68.*

*Published by: Great Plains Agricultural Council.*

# Biological control of leafy spurge

R. PEMBERTON and G. JOHNSON

*USDA-ARS Biological Control of Weeds Laboratory, Albany, CA*

*Oberea erythrocephala*, a cerambycid beetle from Italy, was released last spring on leafy spurge in Oregon and Wyoming. In June, 124 adult insects were caged on leafy spurge near Bonanza, OR. A return trip to that site revealed larval damage, to 23% of stems and roots, of plants previously caged with *Oberea* adults. Two other shipments of *Oberea*. (55 adults in June and 121 adults in July) were sent to Dr. Lavigne for field release in Wyoming. Follow-up on the *Oberea* releases will be made in 1982.

Additional host specificity testing with *Oncochila simplex*, a small lace bug from Italy, was done at the Albany, CA quarantine. Adult survival and nymphal development occurred principally on *Euphorbia* spp. plants. Testing will continue with *O. simplex* on plants related to leafy spurge and economic plants other insects are being studied at the Rome, Italy lab for possible leafy spurge control.

Pathogens with potential on spurge are being studied in Switzerland and Frederick, MD.

*Reprinted with permission from: GPC-14 Annual Report: Leafy Spurge Control in the Great Plains. 1981. pp. 68-69.*

*Published by: Great Plains Agricultural Council.*

# Basic studies on leafy spurge

D. G. DAVIS

*USDA, SE, ARS, Metabolism and Radiation Research Laboratory, State University Station, Fargo, ND 58103*

The leafy spurge projects under the direction of D. G. Davis are in preliminary status. They cover three general areas described briefly below:

## Maintenance and expansion of greenhouse material for use and observation

Material is being built up to obtain genetically uniform material for future studies in such areas as translocation, cold hardiness, or any other research area that seems promising. Seventeen biotypes from the U.S., Canada and one from Europe are being maintained – original material dug from the soil, and 2 cuttings of each biotype. One biotype (arbitrarily labeled No. 13) has been chosen for further expansion. Dr. Donald Galitz, NDSU Botany Dept., will use these for studies of cold hardiness. About 100 young plants and 100 cuttings are being maintained presently. In addition, 53 young plants obtained from 5 original roots and 34 plants obtained from 4 other roots are being maintained. As this material is expanded, it will be used for radiotracer experiments to study translocation of herbicides, microscopy, or other appropriate experiments as needed. Samples of each biotype will be sent to Dr. William Bruckhart and Ms. Sherry Turner, Fort Detrick, Maryland to use in their screening program for new pathogens of leafy spurge.

## Tissue culture

(a) Cell suspension cultures of several biotypes are being maintained. Biotype No. 13 is being used for surveys of potential herbicides. A growth curve has been run on the culture, and a study of 2,4-D effect's as a function of concentration is underway. Other known herbicides will be studied for their phytotoxicity to these cultures. As potential herbicides are available, they will be screened for their effects on cell growth. The objective is to find chemicals that kill leafy spurge cells. Hopefully by appropriate modification these chemicals can be made to penetrate and translocate to vulnerable areas.

(b) Isolated shoot tips have been grown from seedlings. One root out of 10 grown vigorously, two grew quite well, and three had some growth. The rest grew poorly or not at all. Three of the roots formed some shoots along the length of the roots. They were transferred to the greenhouse and are growing in 4-inch pots in vermiculite. Their vigor is

proportional to the vigor they displayed *in vitro*. Other experiments are underway to test the effects of growth regulators on the initiation of shoot buds. The objective is to control bud formation by chemical means.

## Microscopy

Detailed studies will be made with the light and electron microscopes to establish the growth patterns of leafy spurge. Emphasis will be on the development of the vascular system and latex cells. Studies are well underway using scanning electron microscopy (SEM) to serve as background information on which to base all other microscopic observations. SEM studies of seed morphology and of leaf morphology have been done. Light microscopy studies are underway to determine developmental patterns of development. Stomatal development is also being monitored on biotype No. 13. Preliminary transmission electron microscopy (TEM) has been done on root buds. All of these studies have been initiated recently. The objective is to determine if there are vulnerable areas in the life cycle of leafy spurge where control methods (chemical or biological) might be applied successfully.

Close cooperation is expected with the Botany and Agronomy Departments at North Dakota State University, with other SE/ARS Scientists at the metabolism laboratory and other scientists nationwide, as these studies progress.

*Reprinted with permission from: GPC-14 Annual Report: Leafy Spurge Control in the Great Plains. 1981. p. 10.*

*Published by: Great Plains Agricultural Committee.*

# The effects of leafy spurge hay on sheep

B. K. LANDGRAF, P. K. FAY, and K. M. HAVSTAD

A winter feeding trial was conducted in 1981 at the Montana Experiment Station at Fort Ellis, Bozeman, Montana to determine if leafy spurge hay had deleterious effects upon sheep.

Three groups, each containing 5 ewes, were feed different rations of hay. Group I received grass hay, group II, an increasing level of a leafy spurge hay and group III received leafy spurge hay. Each animal received 4 pounds of hay per day. Weights were taken weekly and blood was analyzed every 3 weeks to determine the effect of leafy spurge hay on internal organs of the test animals.

**Table 1. The results of the hay analysis.**

| Hay | Protein | Ash | Phosphorus | Calcium | Ether extractable | fiber | Net energy [a] (Mcal/kg) |
|---|---|---|---|---|---|---|---|
| | % | | | | | | |
| Leafy spurge | 9.1 | 6.9 | 0.22 | 0.85 | 2.8 | 32 | 1.09 |
| Grass | 11.4 | 6.9 | 0.23 | 0.30 | 0.8 | 39 | 1.25 |

[a]Estimated from NE = 1.991 - 0.023 (%CF).

**Table 2. Weight change and average total blood protein for-3 groups of sheep during the 3-month feeding trial.**

| Group - Hay source | Body weight change (lb)[a] | Total blood protein (GM/DL)[a] |
|---|---|---|
| I Control - grass hay | +5.4 b | 7.04 b |
| II Increasing level of leafy spurge hay | -5.4 c | 6.60 c |
| III All leafy spurge hay | -9.2 d | 6.2 d |

[a] Means within a column followed by a different letter are significantly different at the 5% level according to the l.s.d. test of significance.

The results of the hay analysis indicates that while the 3 experiment groups were receiving equal amounts of hay, they were not obtaining an equal quantity of energy for maintenance (Table 1). The 9.1% protein in the leafy spurge is considered adequate for mature, non-pregnant ewes. There was a correlation between the amount of leafy spurge hay fed and amount of weight gain (Table 2).

The total blood protein levels indicate that group I received more dietary protein than the other groups. Although the blood protein differences were significant among groups, all protein levels were in the “normal” range for sheep, therefore the leafy spurge hay did not injure the animals tested.

*Reprinted with permission from: GPC-14 Annual Report: Leafy Spurge Control in the Great Plains. 1981. pp. 70-71.*

*Published by: Great Plains Agricultural Council.*

# Research in progress

ARDELL J. BJUGSTAD

*Rocky Mountain Forest and Range Experiment Station, South Dakota School of Mines, Rapid City, SD*

## Attainment 1981 - Publications:

Bjugstad, Ardell J., and Daniel Noble. 1981. Remote sensing in the inventory of leafy spurge. *In* Abstracts of Annual Meeting of Weed Science Society of America. Las Vegas, Nev.

Francis, Richard E., Meredith M. Morris, Richard J. Myhre, Daniel J. Noble, and Paul Skinner. 1981. Inventory and analysis of leafy spurge sites. – *In* Abstracts of the In-place Inventories: Principles and Practices, X-National Workshop. University of Maine, Orno, Maine.

Skinner, Paul. 1981. Inventory and analysis of leafy spurge (*Euphorbia esula*) sites – A feasibilty study. *In* Abstracts of 1981 Western Society of Weed Science Meeting. San Diego, Calif.

## 1. The effects of fire on germinating capabilities of leafy spurge (*Euphorbia esula*) with and without chemical pretreatment – A preliminary study[1].

| Treatment[2] | Percent leafy spurge seeds germinating |
|---|---|
| Control (no Tordon or burn) | 50 |
| Tordon (only)[3] | 16 |
| Tordon plus burn (head fire) | 10 |
| Tordon plus burn (backfire) | 0 |
| Burn (no Tordon pretreatment) | 5 |

[1]This was a simple one-time burn to determine if there was a possible suggestion of effects of fire. Obviously there are effects and a more comprehensive study will follow.
[2]Plots treated with Tordon spray in June 1979 and burned October 20-23, 1979. Immediately thereafter duff, ashes and soil to a depth of four inches were collected and tested for germination in greenhouse plots.
[3]Apparently residuals of Tordon affected germination abilities of seeds the following autumn.

## 2. Determining select soil-site relationships of leafy spurge (*Euphorbia esula* L.).

The major objective was to sample a minimum of 30 different soil profiles on range sites having various degrees of spurge infestation. A secondary objective was to obtain range condition data for these sites. Both objectives were met with 35 sites analyzed for soil depth, texture, consistence and a profile description written for each site. Soil samples were collected for further laboratory analysis. This research will be concluded the winter of 1982.

## 3. Leafy spurge - The status of our knowledge (with comprehensive bibliography).

The proposed sections and authors are:

| | | |
|---|---|---|
| Distribution and inventory | — | Bjugstad, Noble |
| Biology of the plant | — | Messersmith |
| Chemical control | — | Alley |
| Cultural control | — | Mitich |
| Biological control | — | Dunn, Harris, Fay |
| General information | — | Bjugstad, Noble |

Sections are complete except for first and last which have been reassigned since Nobles transfer. Bibliography search completed and completion of all sections scheduled for fall of 1982.

*Reprinted with permission from: GPC–14 Annual Report: Leafy Spurge Control in the Great Plains. 1981.*

*Published by: Great Plains Agricultural Council.*

# 1981 Annual Report: Leafy spurge control in the Great Plains GPC–14 Research Project Great Plains Agricultural Council

This annual report contains progress reports of both basic and applied leafy spurge control research conducted by project participants during the past year, and some brief reports of research in progress. Many of the reports contain preliminary information from research in progress. Therefore, the information is considered NOT FOR PUBLICATION without permission from the scientist. These brief reports are not intended to supplant full publication of completed research in scientific journals. It is intended that this report will keep scientists informed of leafy spurge research in progress and the results obtained as an aid to finding an effective leafy spurge control program as quickly as possible.

Calvin G. Messersmith, Chairman GPC–14

Additional copies of the GPC–14 Annual Report may be obtained, while supplies last from:

Dr. Rodney G. Lym
Agronomy Department
North Dakota State University
Fargo, North Dakota 58105

*Reprinted with permission from: 1981 GPC-14 Annual Report: Leafy Spurge Control in the Great Plains. pp. 66-68.*

*Published by: Great Plains Agricultural Council.*

# Current research reported by various states and agencies

## MONTANA

A. Sherry Turner is currently in Fredrick, Maryland screening pathogens for use on leafy spurge. Verticle and horizontal screenings are being made of 55 pathogens of *Euphorbia* sp. The pathogens were collected in Europe and most are rust fungi.

B. In an effort to induce root rot pathogens into leafy spurge, a "spurge-puller" is used to extract 1 to 3 in. of root material from the soil. Afterwards a root rot pathogen is sprayed onto the soil.

C. Various herbicides and herbicide combinations are being evaluated for leafy spurge control.

D. Several studies are being conducted to evaluate the value of sheep for leafy spurge control. The ability of leafy spurge seed to germinate after being digested and the effect of lamb maturation when ewes are grazed on leafy spurge are being studied.

E. The effect of fertilizer application on root carbohydrate levels is being evaluated.

## NEBRASKA

A. Previous field applications of picloram in combination with chlorflurenol and mefluidide will be further evaluated. Treatments include tank mixes, sequential and rope wick applications.

B. The effect of applying nitrogen fertilizers before treating leafy spurge with herbicides will be evaluated. The fertilizer has been fall applied and the herbicide treatments will be applied in the spring.

C. The effect of chlorflurenol and mefluidide on leafy spurge physiology is being studied in the greenhouse. Also the effect of nitrogen on inducing underground bud break is being studied.

## NORTH DAKOTA

A. Evaluation of picloram translocation alone and when applied with 2,4-D in leafy spurge. The study includes translocation of the herbicide from parent to daughter plants connected by root tissues growing in nutrient solution as well as translocation in mature plants grown in root boxes.

B. Various growth regulators are being evaluated for their ability to cause bud break and/or increase herbicide translocation in leafy spurge.

C. Competition studies are being conducted to evaluate the ability of sweetclover to compete with leafy spurge previously treated with herbicides or mowed.

D. Soil bioassays are being conducted to monitor the picloram residue in leafy spurge plot areas. Treatments include picloram applied broadcast at various rates and dates and roller application using various solution concentrations, roller heights and dates of treatment.

E. The ability of leafy spurge buds to begin growth from root segments taken from various depths is being evaluated.

## WYOMING

A. Monitoring of repetitive herbicide treatments at four Wyoming locations will be continued.

B. Evaluations will be made on the effect of DPX-4189 plus crop oil on leafy spurge.

C. Evaluation of light rates of dicamba as original and retreatments for leafy spurge will be made.

D. The effect of leafy spurge control on forage production and range utilization will be evaluated.

E. Soil residues of various rates of dicamba and picloram will be monitored.

F. Histological effects on leafy spurge tissue by soil application of picloram and dicamba will be studied.

G. Various growth regulators are being screened for their effect on leafy spurge.